Model Name: GA-Z87-D3H 1.02

SHEET	TITLE
01	COVER SHEET
02	BOM & PCB MODIFY HISTORY
03	BLOCK DIAGRAM
04	CPU_LGA1150-A
05	CPU_LGA1150-B
06	CPU_LGA1150-C
07	DDR III CHANNEL A
08	DDR III CHANNEL B
09	PCH_FDI,DMI,USB,PCIE
10	PCH_RGB,CLK BUFFER
11	PCH_HOST,SATA,PCI
12	PCH_GPIO,CTRL,AUDIO
13	PCH_PWR,GND
14	PCI EXPRESS*16 SLOT
15	PCIEX1*2 , PCIEX4 SLOT
16	ITE8892 PCI BRIDGE
17	PCI SLOT 1&2
18	I/O ITE8728
19	COM, -PROHOT, R_USB
20	Dual BIOS , TPM SLB9635TT
21	ALC892 CODEC
22	REAR AUDIO JACK
23	VCORE PWM_IR3564b
24	VCORE+DDR PWM IR3553+IR3598
25	ME POWER
26	NCP3933 OVER VOLTAGE
27	DISCRETE POWER

SHEET	TITLE
28	F_PANEL , F_USB2.0/3.0
29	ATX POWER, CLOCK GEN
30	HWM , KB/MS , FAN CTRL
31	LAN INTEL i217
32	DVI
33	HDMI , R_USB30
34	TABLE LIST
35	
36	
37	
38	
39	
40	

www.aitech1.ru

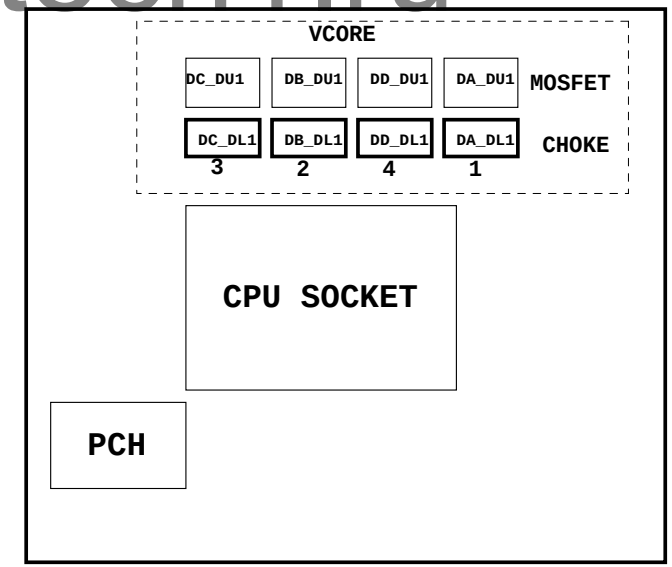

Gigabyte Technology			
Title: Cover Sheet			
Size: Custom	Document Number: GA-Z87-D3H		Rev: 1.02
Date: Thursday, March 28, 2013	Sheet 1 of 34		

GA-Z87-D3H

Component value change history

Data	Change Item	Reason
0.1-0925	E-BOM	
	1. Z77-D3H改為削光黑PCB, slots同原本削光黑機種配色, CPU socket鎳黑	
	2. 8 series IR digital power PWM因Intel spec change, 須改用b版 (必須發行Firmware)	
	3. H77-D3H 注意上H87 chips,上ME power,咖啡黑機種配色,	
	3. H77-D3H GPIO37 需Pull up to 3VDUAL	
0.2	1. Load-line DAR47 2.06K --> 2.37K , DAR46/50 1.4K --> 1.6K , DAC17 150P --> 100P	
	2. N_-LAN_WAKE NR60 8.2K/4 --> 1K/4/1	
	3. DA_DU1,DB_DU1,DD_DU1,DC_DU1 10IFB-403553-01R --> 0TA1-603551-00R	
	4. DDR CHOKE阻值調整	
	5. CPU SOCKET + RM 要用新料號?	
0.2B	1. 確定Power stage用料:IR3553 or IR3550 or 3551?	
	2. GPIO8 "NR136"不上	
	3. Add +12V排阻 RN2~RN6	
0.2C	1. HU1 , HU2 level shifter change to NXP	
0.3	1. PWM MOSFET修改 IR3564B + power stage 改成 IR3564B + IR3535 + power pak (Cancel)	
	3. PWM MOSFET修改 IR3564B + power stage 改成 IR3564B + IR3535 + power pak	
1.0	1. PCIEX16 patch reset circuit 怎麼上?	
	2. Prochot是否只上一組	
	3. PCH_HS & MOS_HS change new 料號	
	4. 因DII 2222禁用, 注意Z87-D3H試產時用Panjit 2222是否可用(BOM已內建)	
	5. HDMI/DVI change to NXP level shifter	
	6. CHECK 5VSB保護線路是否上件	
10A	1. PCB REV1.0 --> REV1.01	
	2. Update LAN: i217V料號	
	3. Add DAQ6,DAR81	
10B	1. Add M3 POWER For Remote wake on LAN	
10C	1. Remove DAJP1	
	2. 5VDUAL OVP --> 5VSB OVP	
	3. Remove 全成信PCB	

Circuit or PCB layout change

DATE	Change Item	Reason
0.1	E-BOM	
0.2	1. U8 pin3加粗40mils 2. Update LAYOUT NEW RULE for四層板 3. MDA6線長T型要繞等長 4. N_GPIO37 pull up VCC3 --> 3VDUAL 5. CPU Thertrip CPU_VTT --> VCC1_05_PCH 6. 確認 R/G/B ESD擺放位置 7. Add PCIEX16 reset patch circuit 8. PCIE signal by group 成對走 9. VIN0 --> VCORE0 , VIN5 --> VCORE 10. CS 1pin --> 2pin 11. 後窗部份鋪銅會挖 + 字處理 12. Add MA_DR8 , MA_DC8單獨下地 13. add VTT_PWRGD control circit 14. Update F_PANEL footprint "H2X10PANEL-3" 15. NR132跟NC59 layout位置交換 16. Add DS_ME GP67 control 17. Q6位置靠近 PWM power control pin 18. WR59 change to "R0204-2" 19. 文字面 "DualBIOS" , 改為" Dual UEFI BIOS" , Add "Intel GbE LAN" 20. MAU2 REF "GND" 21. DDR Choke ML1,ML2 1.2uH/20A --> 0.8uH/35A	
0.21	1. AUDIO SPDIF-IN CR77 "0402-2" FOR short protection 2. add AUDIO ON/OFF PLAYER 3. Change PCIEX1/PCIX4 CLK 4. Update F_PANEL footprint 5. CPU VRIN OV IO_GP81 --> IO_GP21	
0.3	1. PWM MOSFET修改 IR3564B + power stage 改成 IR3564B + IR3535 + power pak (Cancel)	
1.0	1. 0 ohm --> short pad 2. 簡化CPU Config setting 3. 預留N_PCH_DPWROK 控制線路 4. 注意Slot和後窗正面有做十字Thermal處理 5. NBC65移靠近PCH 6. Add R700~R702 for FAN short protection 7. PWR_LED 改為IO_GP65 8. VTT_PWRGD Update 9. N_GPIO37 pull-up to VCC3 10. +12V RN2~RN6 & VCC/VCC3/5VSB dummy load 排阻 11. DDR_15V H/W monitor detect 改從 DDR slot 拉回 12. 5VSB AD1要過 NET 13. DDR VIN 間隔拉開 , 背板GATE往上移 14. Add DDR_15V dummy load 15. 5VSB/5VDUAL OVP protection	
1.01	1. 0 ohm --> short pad 2. Remove "BIOS_PH" & "M_BIOS socket" & "CS" pin 3. Add MADQ6 4. USB3 port3/4 , 5/6 swap	
1.02	1. CPU FAN ADD 100uF 2. DART2改成R0402-2(靠近DD_DU1) ,DART4改成R0603-RH(放在DART2左邊), RS1改成R0402-2 3. Add DAR82 For MOSFET "PHSFLT-" protect	
1.03	1. ALL FAN ADD 0.1u/4 2. 文字面UEFI DUALBIOS 3. USB3.0/Intel Gbe LAN/HDMI/DVI文字面移到MOS_HS外面 4. HDMI update "HDMI-3"	

www.aitech.ru

Gigabyte Technology			
Title	BOM & PCB MODIFY HISTORY		
Size Custom	Document Number GA-Z87-D3H		Rev 1.02
Date: Monday, April 22, 2013	Sheet 2 of 34		

BLOCK DIAGRAM

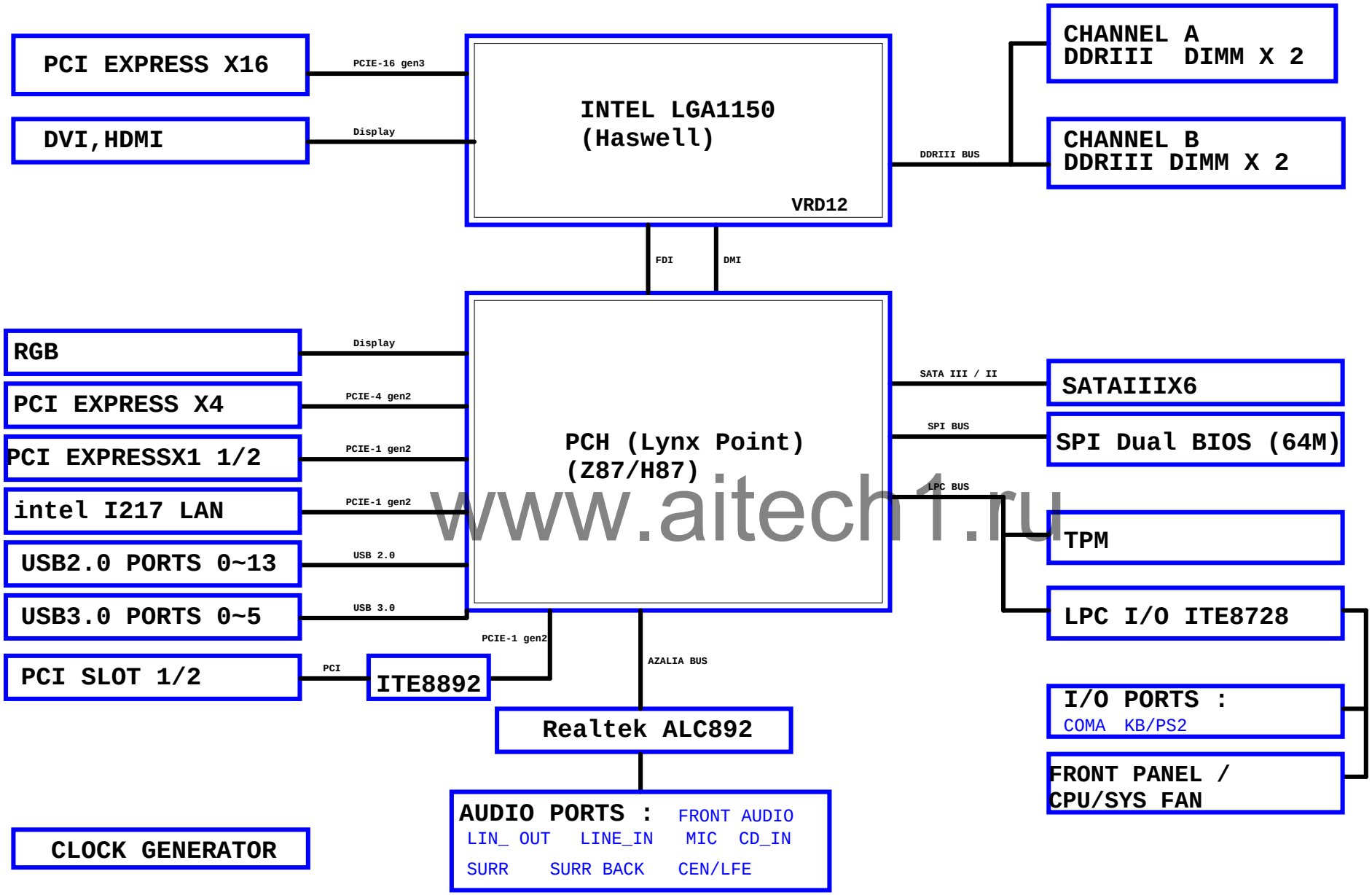

www.aitech1.ru

Gigabyte Technology			
Title	BLOCK DIAGRAM		
Size C	Document Number	GA-Z87-D3H	Rev 1.02
Date: Friday, March 15, 2013	Sheet 3 of 34		

LGA1150 (E)

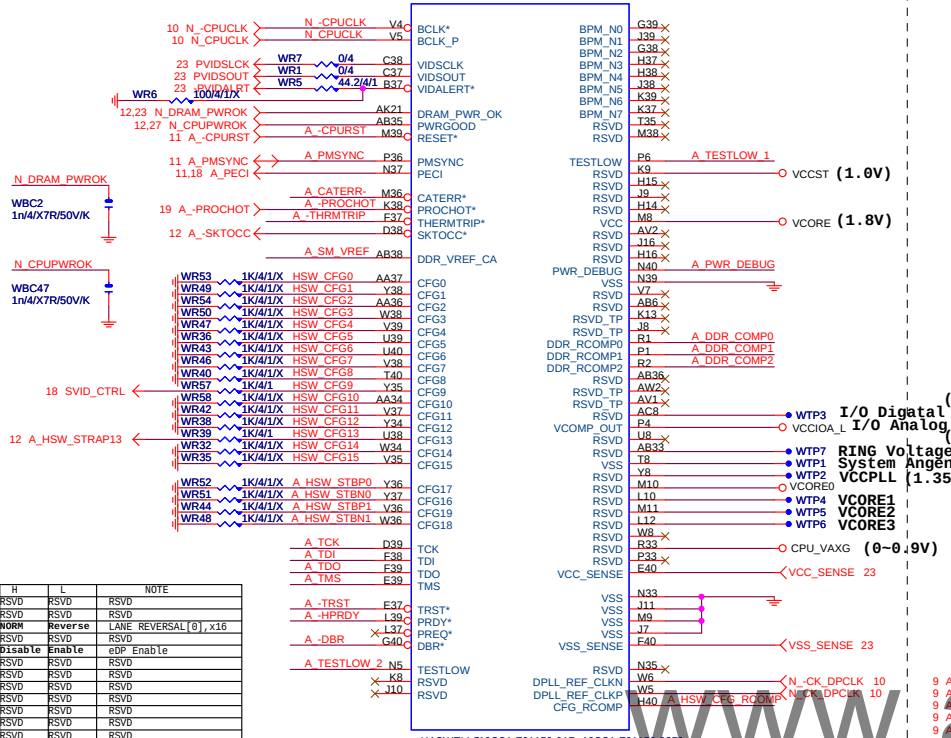

CFG	H	L	NOTE
0	RSVD	RSVD	RSVD
1	RSVD	RSVD	RSVD
2	**NORM**	**Reverse**	LANE REVERSAL[0],x16
3	RSVD	RSVD	RSVD
4	**Disable**	**Enable**	eDP Enable
7	RSVD	RSVD	RSVD
8	RSVD	RSVD	RSVD
9	RSVD	RSVD	RSVD
10	RSVD	RSVD	RSVD
11	RSVD	RSVD	RSVD
12	RSVD	RSVD	RSVD
13	RSVD	RSVD	RSVD
14	RSVD	RSVD	RSVD
15	RSVD	RSVD	RSVD
16	RSVD	RSVD	RSVD
17	RSVD	RSVD	RSVD

CFG6	CFG5	PCIE CONFIG
1	1	1X16 , Default
1	0	2X8
0	1	RSVD
0	0	X8,X4,X4

CFG 0-17 all internal PULL-UP

HSW_CFG9 : Disable CPU SVID

HSW_CFG13 : Improve CPU 125MHz over-clocking

LGA1150 (D)

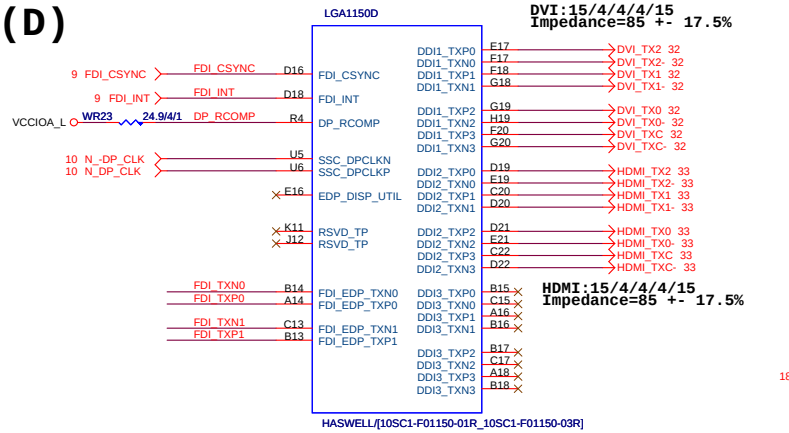

DVI:15/4/4/4/15
Impedance=85 +- 17.5%

HDMI:15/4/4/4/15
Impedance=85 +- 17.5%

FDI:12/4/4/4/12(breakout min 6/4/4/4/6)
Impedance=85 +- 17.5%

FDI_TXP[0..1] 9
FDI_TXN[0..1] 9

LGA1155 (C)

PCIEX16:20/5/4/5/20(breakout min 10/4/4/4/10)
Impedance=80 +- 17.5%

DMI:12/4/4/4/12(breakout min 8/4/4/4/8)
Impedance=85 +- 17.5%

PA_EXP_TXP[0..15] PA_EXP_TXP[0..15] 14
PA_EXP_TXN[0..15] PA_EXP_TXN[0..15] 14
PA_EXP_RXP[0..15] PA_EXP_RXP[0..15] 14
PA_EXP_RXN[0..15] PA_EXP_RXN[0..15] 14

CPU SVID

CPU PU/PD

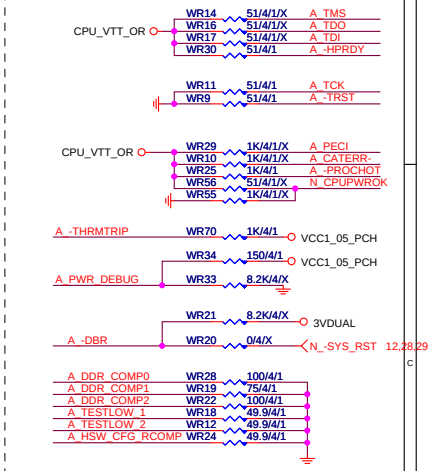

SM REF

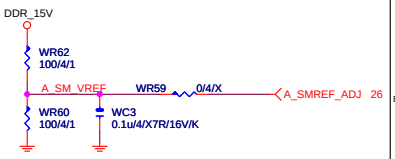

-CPURST

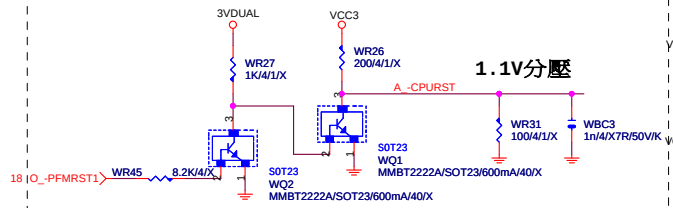

THRMTRIP DISABLE

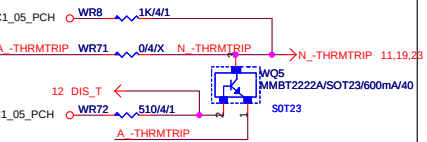

Title	CPU LGA1150-A		
Size Custom	Document Number GA-Z87-D3H		Rev 1.02
Date: Wednesday, April 24, 2013	Sheet 4 of 34		

www.itechnotes.com

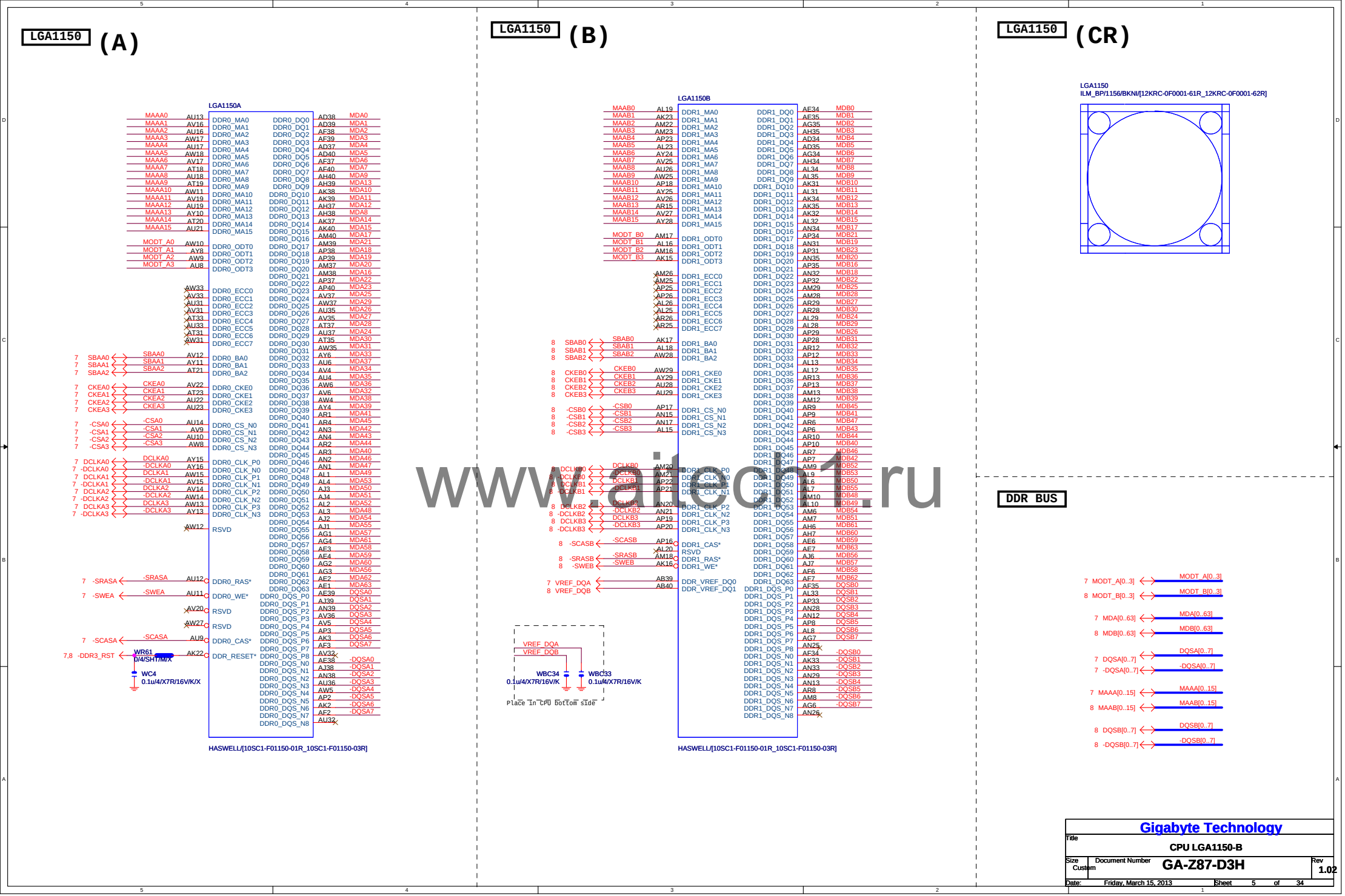

www.alldata1.ru

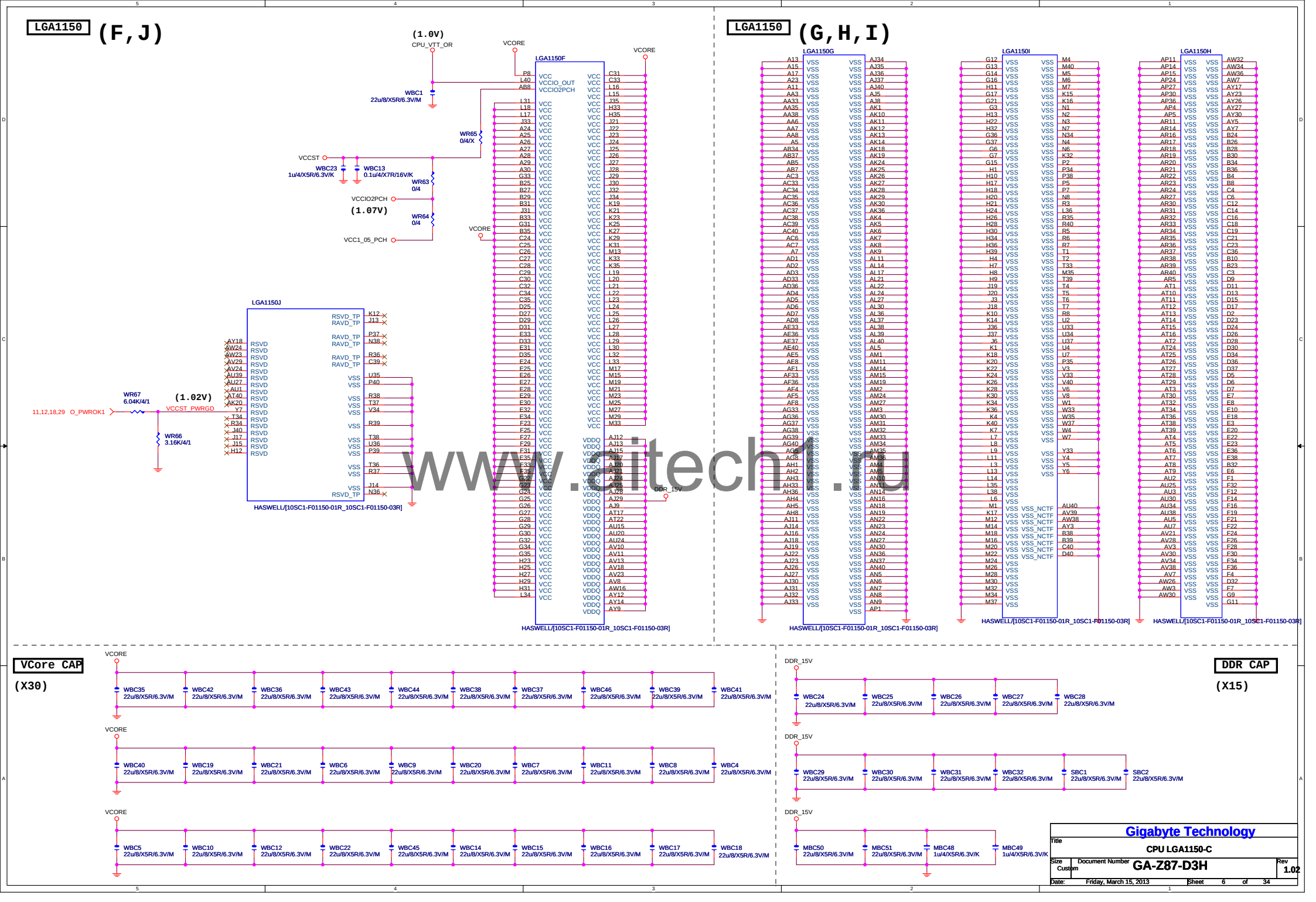
LGA1150 (F,J)
LGA1150 (G,H,I)
LGA1150F
LGA1150J
LGA1150G
LGA1150I
LGA1150H
(1.0V)
CPU_VTT_OR
VCORE
WBC1
22u/8/X5R/6.3V/M
WR65
0/4/X
VCCST
WBC23
1u/4/X5R/6.3V/K
WBC13
0.1u/4/X7R/16V/K
WR63
0/4
VCCIO2PCH
(1.07V)
WR64
0/4
VCC1_05_PCH
WR67
6.04K/4/1
(1.02V)
VCCST_PWRGD
11,12,18,29 O_PWROK1
WR66
3.16K/4/1
DDR_15V
HASWELL/[10SC1-F01150-01R_10SC1-F01150-03R]
VCore CAP
(X30)
DDR CAP
(X15)
WBC35 22u/8/X5R/6.3V/M
WBC42 22u/8/X5R/6.3V/M
WBC36 22u/8/X5R/6.3V/M
WBC43 22u/8/X5R/6.3V/M
WBC44 22u/8/X5R/6.3V/M
WBC38 22u/8/X5R/6.3V/M
WBC37 22u/8/X5R/6.3V/M
WBC46 22u/8/X5R/6.3V/M
WBC39 22u/8/X5R/6.3V/M
WBC41 22u/8/X5R/6.3V/M
WBC40 22u/8/X5R/6.3V/M
WBC19 22u/8/X5R/6.3V/M
WBC21 22u/8/X5R/6.3V/M
WBC6 22u/8/X5R/6.3V/M
WBC9 22u/8/X5R/6.3V/M
WBC20 22u/8/X5R/6.3V/M
WBC7 22u/8/X5R/6.3V/M
WBC11 22u/8/X5R/6.3V/M
WBC8 22u/8/X5R/6.3V/M
WBC4 22u/8/X5R/6.3V/M
WBC5 22u/8/X5R/6.3V/M
WBC10 22u/8/X5R/6.3V/M
WBC12 22u/8/X5R/6.3V/M
WBC22 22u/8/X5R/6.3V/M
WBC45 22u/8/X5R/6.3V/M
WBC14 22u/8/X5R/6.3V/M
WBC15 22u/8/X5R/6.3V/M
WBC16 22u/8/X5R/6.3V/M
WBC17 22u/8/X5R/6.3V/M
WBC18 22u/8/X5R/6.3V/M
WBC24 22u/8/X5R/6.3V/M
WBC25 22u/8/X5R/6.3V/M
WBC26 22u/8/X5R/6.3V/M
WBC27 22u/8/X5R/6.3V/M
WBC28 22u/8/X5R/6.3V/M
WBC29 22u/8/X5R/6.3V/M
WBC30 22u/8/X5R/6.3V/M
WBC31 22u/8/X5R/6.3V/M
WBC32 22u/8/X5R/6.3V/M
SBC1 22u/8/X5R/6.3V/M
SBC2 22u/8/X5R/6.3V/M
MBC50 22u/8/X5R/6.3V/M
MBC51 22u/8/X5R/6.3V/M
MBC48 1u/4/X5R/6.3V/K
MBC49 1u/4/X5R/6.3V/K
Gigabyte Technology
Title
CPU LGA1150-C
Size Custom
Document Number GA-Z87-D3H
Rev 1.02
Date: Friday, March 15, 2013
Sheet 6 of 34
www.itech.u

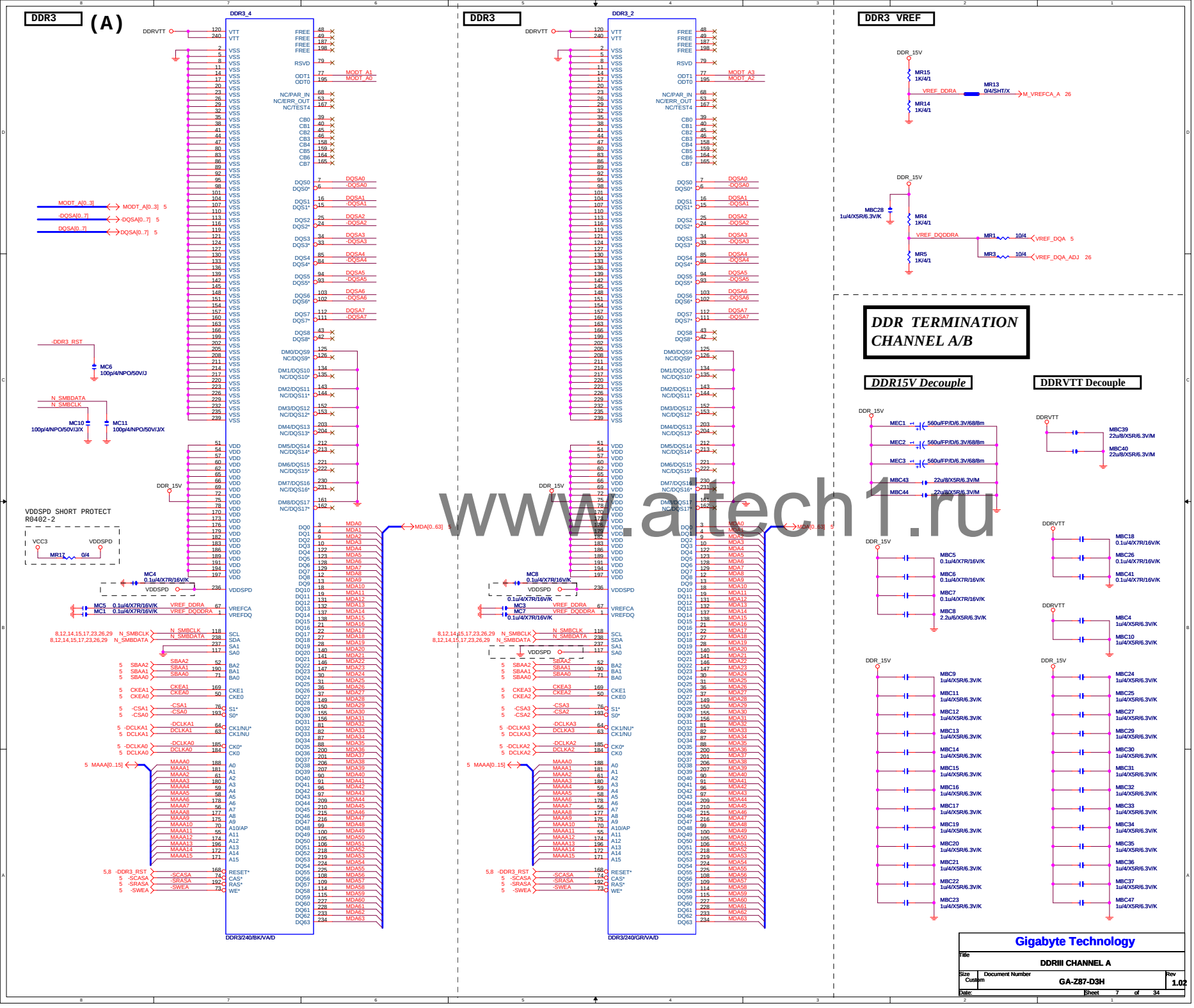

www.altech1.ru

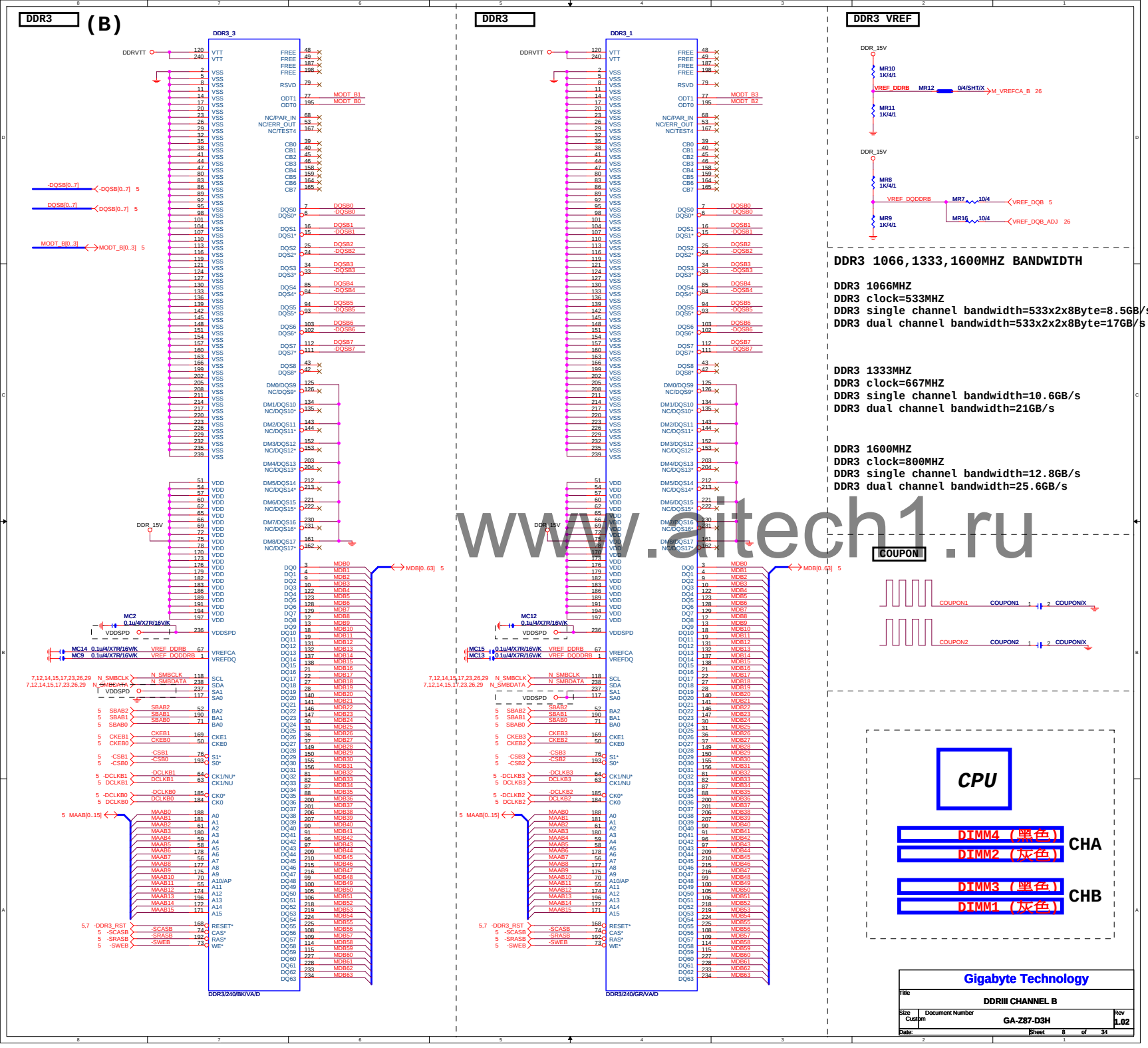

www.oitech1.ru

PCH (B)

DMI:12/4/4/4/12(breakout min 8/4/4/4/8)
Impedance=85 +- 17.5%

USB2.0 : 12/5/7/5/12 (breakout min 8/4/4/4/8)
Impedance=85 +- 17.5%

B85: Port 6/7 N/A
H81: Port 6/7/12/13 N/A

Port要對應

PCHB

DMI: A_DMI_0TXN, A_DMI_0TXP, A_DMI_0RXN, A_DMI_0RXP, A_DMI_1TXN, A_DMI_1TXP, A_DMI_1RXN, A_DMI_1RXP, A_DMI_2TXN, A_DMI_2TXP, A_DMI_2RXN, A_DMI_2RXP, A_DMI_3TXN, A_DMI_3TXP, A_DMI_3RXN, A_DMI_3RXP

USB: DMI_RXN_0, DMI_RXP_0, DMI_TXN_0, DMI_TXP_0, DMI_RXN_1, DMI_RXP_1, DMI_TXN_1, DMI_TXP_1, DMI_RXN_2, DMI_RXP_2, DMI_TXN_2, DMI_TXP_2, DMI_RXN_3, DMI_RXP_3, DMI_TXN_3, DMI_TXP_3, DMI_RCOMP, PCIE_RCOMP, CLKIN_DMI_N, CLKIN_DMI_P

USBN_0, USBP_0, USBN_1, USBP_1, USBN_2, USBP_2, USBN_3, USBP_3, USBN_4, USBP_4, USBN_5, USBP_5, USBN_6, USBP_6, USBN_7, USBP_7, USBN_8, USBP_8, USBN_9, USBP_9, USBN_10, USBP_10, USBN_11, USBP_11, USBN_12, USBP_12, USBN_13, USBP_13

N_USBP0 28, N_+USBP0 28, N_-USBP1 28, N_+USBP1 28, N_-USBP2 33, N_+USBP2 33, N_-USBP3 33, N_+USBP3 33, N_-USBP4 19, N_+USBP4 19, N_-USBP5 19, N_+USBP5 19, N_-USBP6 30, N_+USBP6 30, N_-USBP7 30, N_+USBP7 30, N_-USBP8 31, N_+USBP8 31, N_-USBP9 31, N_+USBP9 31, N_-USBP10 28, N_+USBP10 28, N_-USBP11 28, N_+USBP11 28, N_-USBP12 28, N_+USBP12 28, N_-USBP13 28, N_+USBP13 28

B85/H81: 6/7 N\A

H81:12/13 N\A

VCC1_5_PCH — NR50 7.5K/4/1 — DMI_COMP, PCIE_COMP
NR40 7.5K/4/1
W=8 mil out of PCH
S=15 mil to other signals

29 CK_-SRCCLK_PCH — CK_-SRCCLK_PCH
29 CK_SRCCLK_PCH — CK_SRCCLK_PCH

REAR USB3.0: 23 PCH_USB3_RXN2, 33 PCH_USB3_RXP2, 33 PCH_USB3_TXN2, 33 PCH_USB3_TXP2, 33 PCH_USB3_RXN3, 33 PCH_USB3_RXP3, 33 PCH_USB3_TXN3, 33 PCH_USB3_TXP3

LAN AR8161: 31 LB_ML_IN, 31 LB_ML_IP, 31 LB_ML_ON, 31 LB_ML_OP

ITE8892 PCI Bridge: 16 G_PCIEBIN, 16 G_PCIEBIP, 16 G_PCIEBON, 16 G_PCIEBOP

PCIEX4 port1: 15 PE_PCIE_IN1, 15 PE_PCIE_IP1, 15 PE_PCIE_TN1, 15 PE_PCIE_TP1

PCIEX4 port2: 15 PF_PCIE_IN2, 15 PF_PCIE_IP2, 15 PF_PCIE_TN2, 15 PF_PCIE_TP2

PCIEX4 port3 PCIEX1_1: 15 PI_PCIE_IN3, 15 PI_PCIE_IP3, 15 PI_PCIE_TN3, 15 PI_PCIE_TP3

PCIEX4 port4 PCIEX1_2: 15 PJ_PCIE_IN4, 15 PJ_PCIE_IP4, 15 PJ_PCIE_TN4, 15 PJ_PCIE_TP4

電容放靠近 Device & PCI-E Slot

PCIE: PCIE_PERN_1_USB3_RXN_2, PCIE_PERP_1_USB3_RXP_2, PCIE_PETN_1_USB3_TXN_2, PCIE_PETP_1_USB3_TXP_2, PCIE_PERN_2_USB3_RXN_3, PCIE_PERP_2_USB3_RXP_3, PCIE_PETN_2_USB3_TXN_3, PCIE_PETP_2_USB3_TXP_3, PCIE_PERN_3, PCIE_PERP_3, PCIE_PETN_3, PCIE_PETP_3, PCIE_PERN_4, PCIE_PERP_4, PCIE_PETN_4, PCIE_PETP_4, PCIE_PERN_5, PCIE_PERP_5, PCIE_PETN_5, PCIE_PETP_5, PCIE_PERN_6, PCIE_PERP_6, PCIE_PETN_6, PCIE_PETP_6, PCIE_PERN_7, PCIE_PERP_7, PCIE_PETN_7, PCIE_PETP_7, PCIE_PERN_8, PCIE_PERP_8, PCIE_PETN_8, PCIE_PETP_8

OC0B_GP59, OC1B_GP40, OC2B_GP41, OC3B_GP42, OC4B_GP43, OC5B_GP9, OC6B_GP10, OC7B_GP14 — N_-USBOC_F 28, N_-USBOC_R 28,31

N_GPIO14

USBRBIASB, USBRBIAS — N_USBRBIAS — NR47 22.6/4/1
W=8 mil out of PCH
S=15 mil to other signals

CLKIN_DOT96N, CLKIN_DOT96P — CK_-DOTCLK 29, CK_DOTCLK 29

N_GPIO14 — NR130 8.2K/4 — 3VDUAL

N_-USBOC_F — NBC82 0.1u/4/X7R/16V/K
N_-USBOC_R — NBC83 0.1u/4/X7R/16V/K

Z87/S/[10HB1-030Z87-10R]

PCIEX1:15/4/4/4/15 (breakout min 8/4/4/4/8)
Impedance=85 +- 17.5%

PCH PCIE ,DMI 15/4/4/4//15
---
usb2.0 12/5/7/5//12
usb3.0 20/5/7/5//20

PCH (F)

USB3.0 : 20/5/7/5/20 (breakout min 8/4/4/4/8)
Impedance=85 +- 17.5%

PCHF

USB3: 28 PCH_USB3_RXN0, 28 PCH_USB3_RXP0, 28 PCH_USB3_TXN0, 28 PCH_USB3_TXP0, 28 PCH_USB3_RXN1, 28 PCH_USB3_RXP1, 28 PCH_USB3_TXN1, 28 PCH_USB3_TXP1, 19 PCH_USB3_RXN4, 19 PCH_USB3_RXP4, 19 PCH_USB3_TXN4, 19 PCH_USB3_TXP4, 19 PCH_USB3_RXN5, 19 PCH_USB3_RXP5, 19 PCH_USB3_TXN5, 19 PCH_USB3_TXP5

H81:USB3.0 N\A

FDILINK: FDI_RXN_0, FDI_RXP_0, FDI_RXN_1, FDI_RXP_1, FDI_CSYNC, FDI_INT, FDI_RCOMP

N1 FDI_TXN0, N2 FDI_TXP0, P2 FDI_TXN1, P3 FDI_TXP1, L2 FDI_CSYNC — FDI_CSYNC 4, L3 FDI_INT — FDI_INT 4, K2 NR29 7.5K/4/1 — VCC1_5_PCH

FDI:12/4/4/4/12
Impedance=85 +- 17.5%

VCC3 — NR62 8.2K/4, NR63 8.2K/4 — AK28, AT34

TACH6_GP70, TACH7_GP71

Z87/S/[10HB1-030Z87-10R]

FDI_TXP[0..1] — FDI_TXP[0..1] 4
FDI_TXN[0..1] — FDI_TXN[0..1] 4

USB3.0:20/5/7/5/20 (breakout min 8/4/4/4/8) ; ONLY 3 VIAS
Impedance=85 +- 17.5%
Back Panel < 10000 MILS
Front Panel < 6000 MILS

CK_SRCCLK_PCH — NR89 8.2K/4
CK_-SRCCLK_PCH — NR88 8.2K/4

Mount for integrated clock Generation Mode

CK_DOTCLK — NR92 8.2K/4
CK_-DOTCLK — NR91 8.2K/4

NR92 short to GND in non graphic SKU

www.aitech1.ru

PCH (J)

PCHJ

VSS_NCTF: AT1, AT41, AU1, AV1, AV2, AV40, AV41, AW2, AW40, B40, B41, C41, D1, D41

TP22, TP23, TP21, TP20, TP14, TP15, TP12, TP10, TP11, TP9, TP3, TP4, TP1, TP2, TP5, TP6, TP7, TP8

U11, U10, AJ14, AK14, K34, K33, AH24, L16, K16, AM34, R12, N12, L22, K22, R4, K5, P5, L5

VSS: AC31

VSS: AF3, AV21

Z87/S/[10HB1-030Z87-10R]

PCH H/S

PCH_HS

1, 2

PCH_HS/[12SP2-S06012-11R_12SP2-S06012-12R_12SP2-S06012-13R]

USB TABLE

OC[3:0]# for Device 29 (ports 0-7)
OC[7:4]# for Device 26 (ports 8-13)

USB OC#	Configure
OC0#	USB0,1
OC1#	USB2,3
OC2#	USB4,5
OC3#	USB6,7
OC4#	USB8,9
OC5#	USB10,11
OC6#	USB12,13
OC7#	Not Use

Gigabyte Technology

Title: PCH FDI,DMI,USB ,PCIE

Size: Custom | Document Number: GA-Z87-D3H | Rev: 1.02

Date: Friday, March 29, 2013 | Sheet 9 of 34

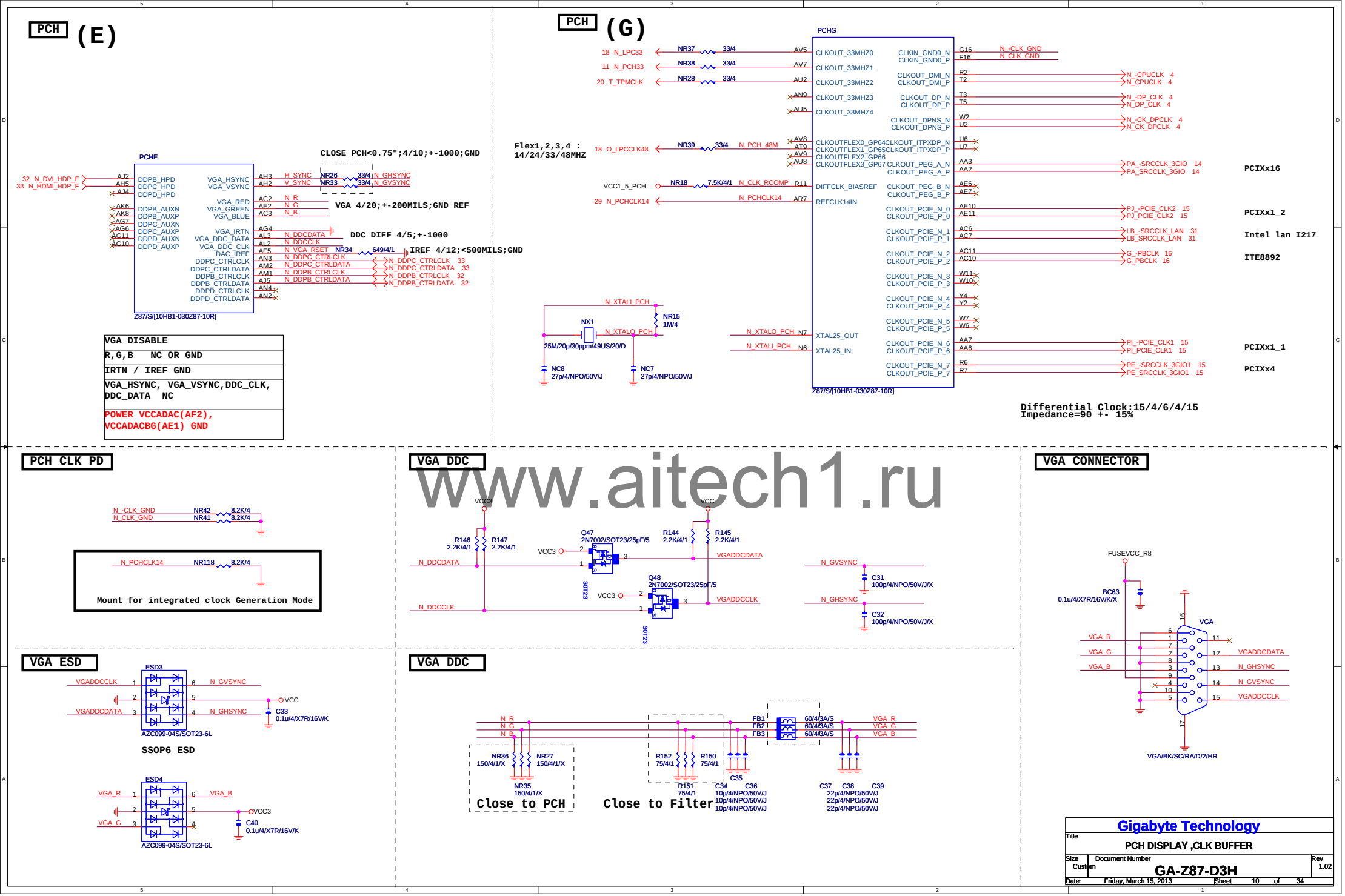

www.aitech1.ru

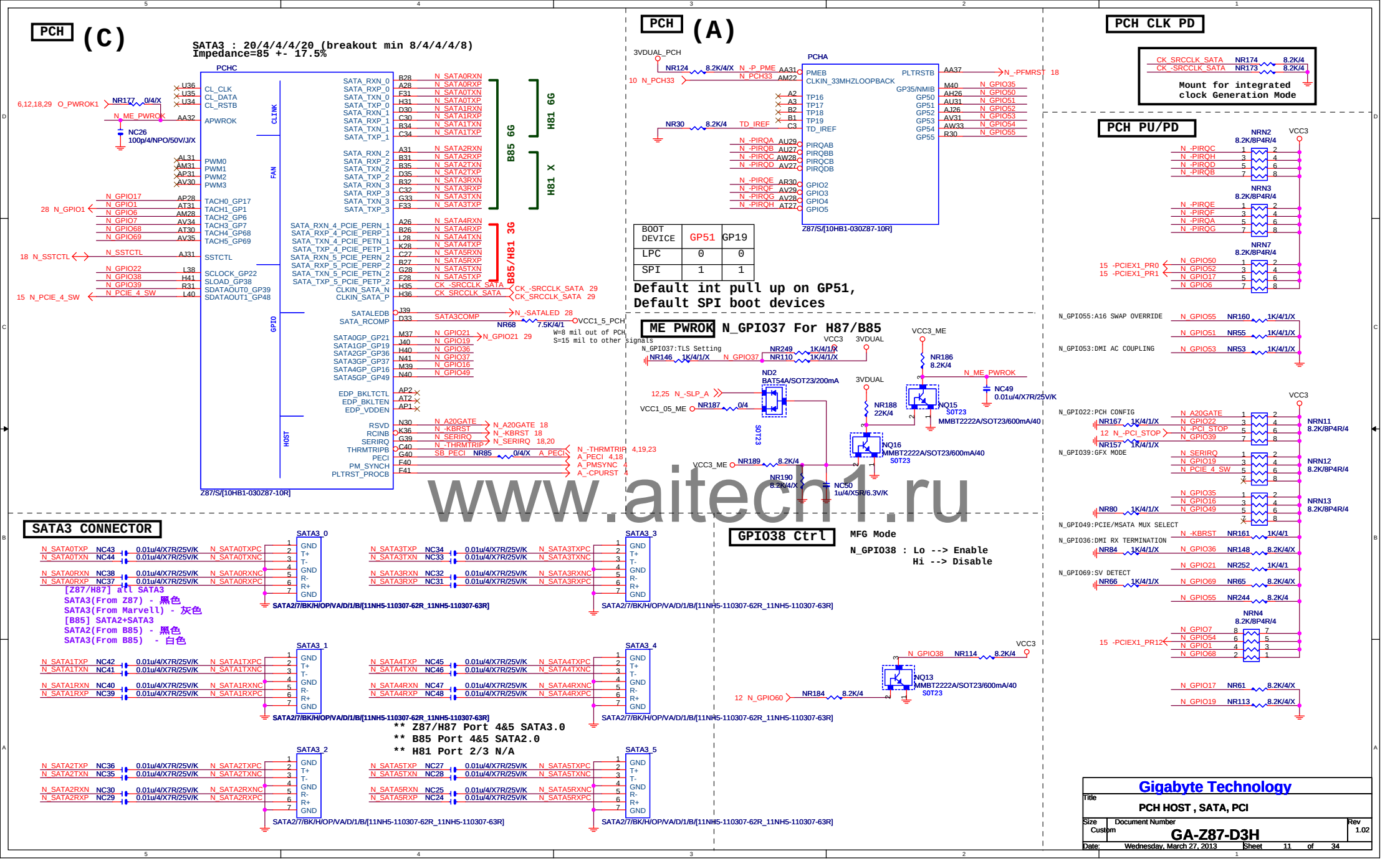

www.aitech1.ru

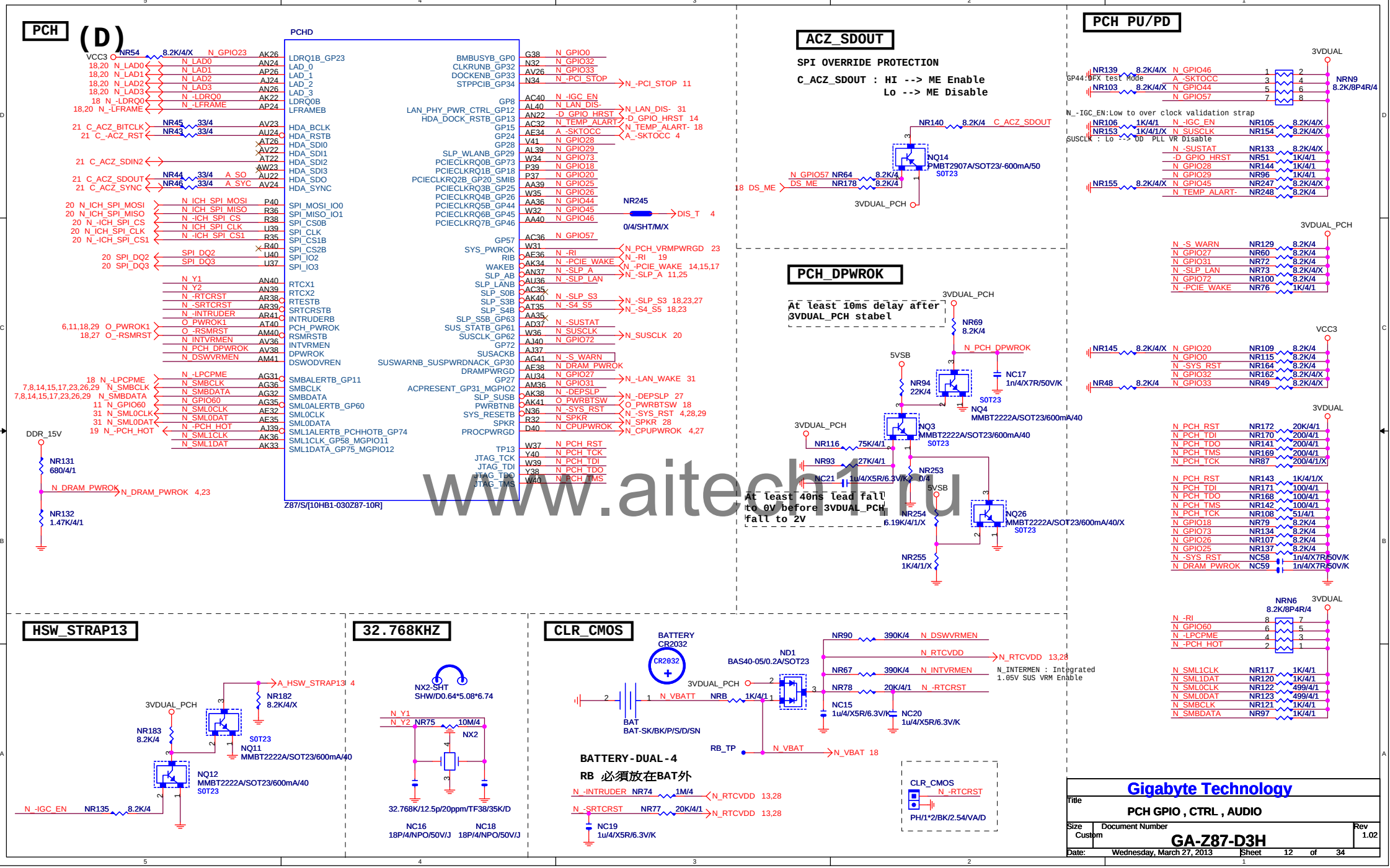

www.aitech1.ru

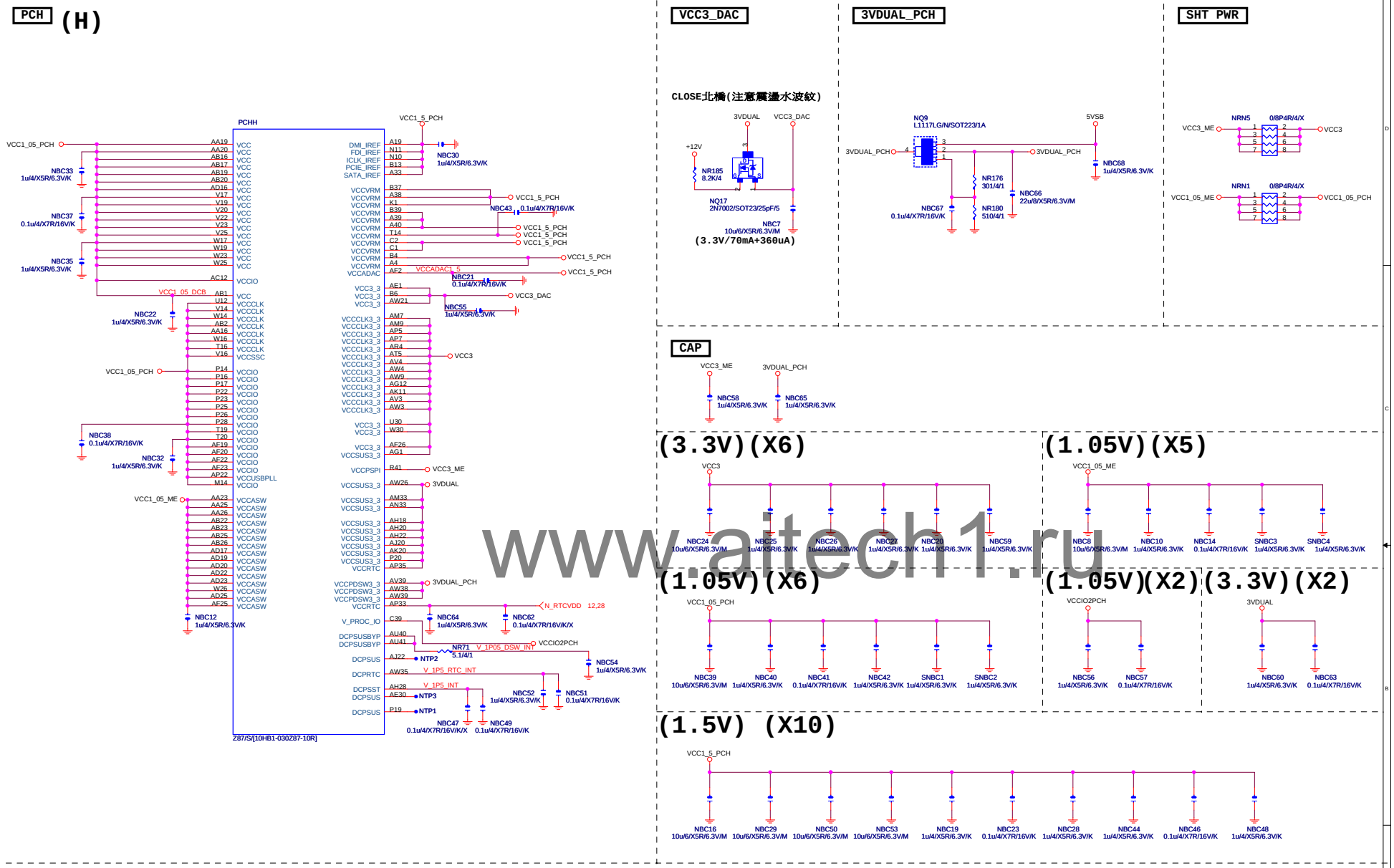

www.altech1.ru

Gigabyte Technology	
Title	PCH PWR ,GND
Size: Custom	Document Number: GA-Z87-D3H
Rev	1.02
Date: Friday, March 15, 2013	Sheet 13 of 34

PCIEX16 CAP

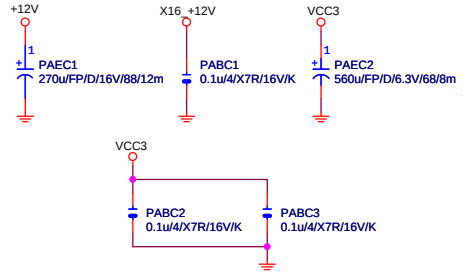

PCIEX16 PROTECT SHT

+12 protect
short-wire test

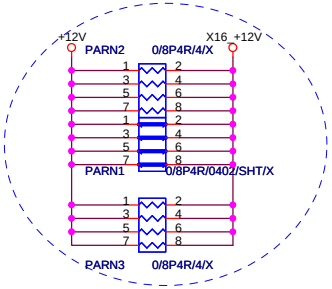

PCIEX16 AC CAP

PA_EXP_TXP0	PAC5	0.22u/4/X5R/6.3V/K	PA_EXP_TXP0_C
PA_EXP_TXN0	PAC4	0.22u/4/X5R/6.3V/K	PA_EXP_TXN0_C
PA_EXP_TXP1	PAC6	0.22u/4/X5R/6.3V/K	PA_EXP_TXP1_C
PA_EXP_TXN1	PAC7	0.22u/4/X5R/6.3V/K	PA_EXP_TXN1_C
PA_EXP_TXP2	PAC8	0.22u/4/X5R/6.3V/K	PA_EXP_TXP2_C
PA_EXP_TXN2	PAC9	0.22u/4/X5R/6.3V/K	PA_EXP_TXN2_C
PA_EXP_TXP3	PAC10	0.22u/4/X5R/6.3V/K	PA_EXP_TXP3_C
PA_EXP_TXN3	PAC11	0.22u/4/X5R/6.3V/K	PA_EXP_TXN3_C
PA_EXP_TXP4	PAC12	0.22u/4/X5R/6.3V/K	PA_EXP_TXP4_C
PA_EXP_TXN4	PAC13	0.22u/4/X5R/6.3V/K	PA_EXP_TXN4_C
PA_EXP_TXP5	PAC14	0.22u/4/X5R/6.3V/K	PA_EXP_TXP5_C
PA_EXP_TXN5	PAC15	0.22u/4/X5R/6.3V/K	PA_EXP_TXN5_C
PA_EXP_TXP6	PAC16	0.22u/4/X5R/6.3V/K	PA_EXP_TXP6_C
PA_EXP_TXN6	PAC17	0.22u/4/X5R/6.3V/K	PA_EXP_TXN6_C
PA_EXP_TXP7	PAC19	0.22u/4/X5R/6.3V/K	PA_EXP_TXP7_C
PA_EXP_TXN7	PAC18	0.22u/4/X5R/6.3V/K	PA_EXP_TXN7_C
PA_EXP_TXP8	PAC20	0.22u/4/X5R/6.3V/K	PA_EXP_TXP8_C
PA_EXP_TXN8	PAC21	0.22u/4/X5R/6.3V/K	PA_EXP_TXN8_C
PA_EXP_TXP9	PAC22	0.22u/4/X5R/6.3V/K	PA_EXP_TXP9_C
PA_EXP_TXN9	PAC23	0.22u/4/X5R/6.3V/K	PA_EXP_TXN9_C
PA_EXP_TXP10	PAC24	0.22u/4/X5R/6.3V/K	PA_EXP_TXP10_C
PA_EXP_TXN10	PAC25	0.22u/4/X5R/6.3V/K	PA_EXP_TXN10_C
PA_EXP_TXP11	PAC26	0.22u/4/X5R/6.3V/K	PA_EXP_TXP11_C
PA_EXP_TXN11	PAC27	0.22u/4/X5R/6.3V/K	PA_EXP_TXN11_C
PA_EXP_TXP12	PAC28	0.22u/4/X5R/6.3V/K	PA_EXP_TXP12_C
PA_EXP_TXN12	PAC29	0.22u/4/X5R/6.3V/K	PA_EXP_TXN12_C
PA_EXP_TXP13	PAC30	0.22u/4/X5R/6.3V/K	PA_EXP_TXP13_C
PA_EXP_TXN13	PAC31	0.22u/4/X5R/6.3V/K	PA_EXP_TXN13_C
PA_EXP_TXP14	PAC32	0.22u/4/X5R/6.3V/K	PA_EXP_TXP14_C
PA_EXP_TXN14	PAC33	0.22u/4/X5R/6.3V/K	PA_EXP_TXN14_C
PA_EXP_TXP15	PAC34	0.22u/4/X5R/6.3V/K	PA_EXP_TXP15_C
PA_EXP_TXN15	PAC35	0.22u/4/X5R/6.3V/K	PA_EXP_TXN15_C

PCI-E REV:1.1--> 2.5GHZ

PCE-E X1(單向) BANDWITH=2.5GHz*(8b/10b)=2Gb/s=250MB/s

PCE-E X1(雙向) BANDWITH=2.5GHz*(8b/10b)X2=4Gb/s=500MB/s

PCE-E X16(單向) BANDWITH=2.5GHz*(8b/10b)X16=32Gb/s=4GB/s

PCE-E X16(雙向) BANDWITH=2.5GHz*(8b/10b)X16X2=64Gb/s=8GB/s

PCI-E REV:2.0--> 5GHZ

PCIEX16 SLOT

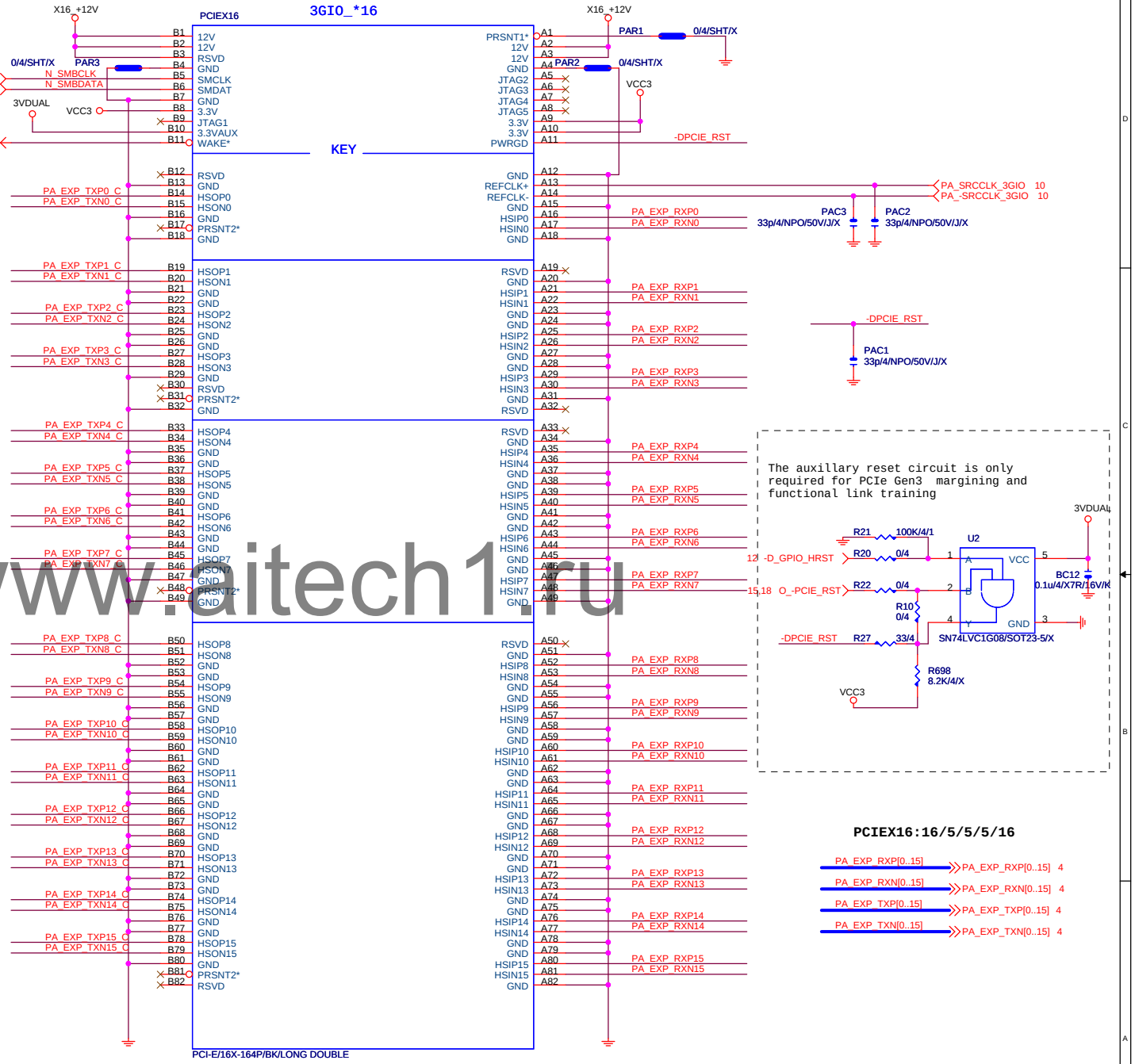

www.aitech1.ru

Gigabyte Technology	
Title	PCI EXPRESS * 16
Size Custom	Document Number GA-Z87-D3H
Rev	1.02
Date: Friday, March 15, 2013	Sheet 14 of 34

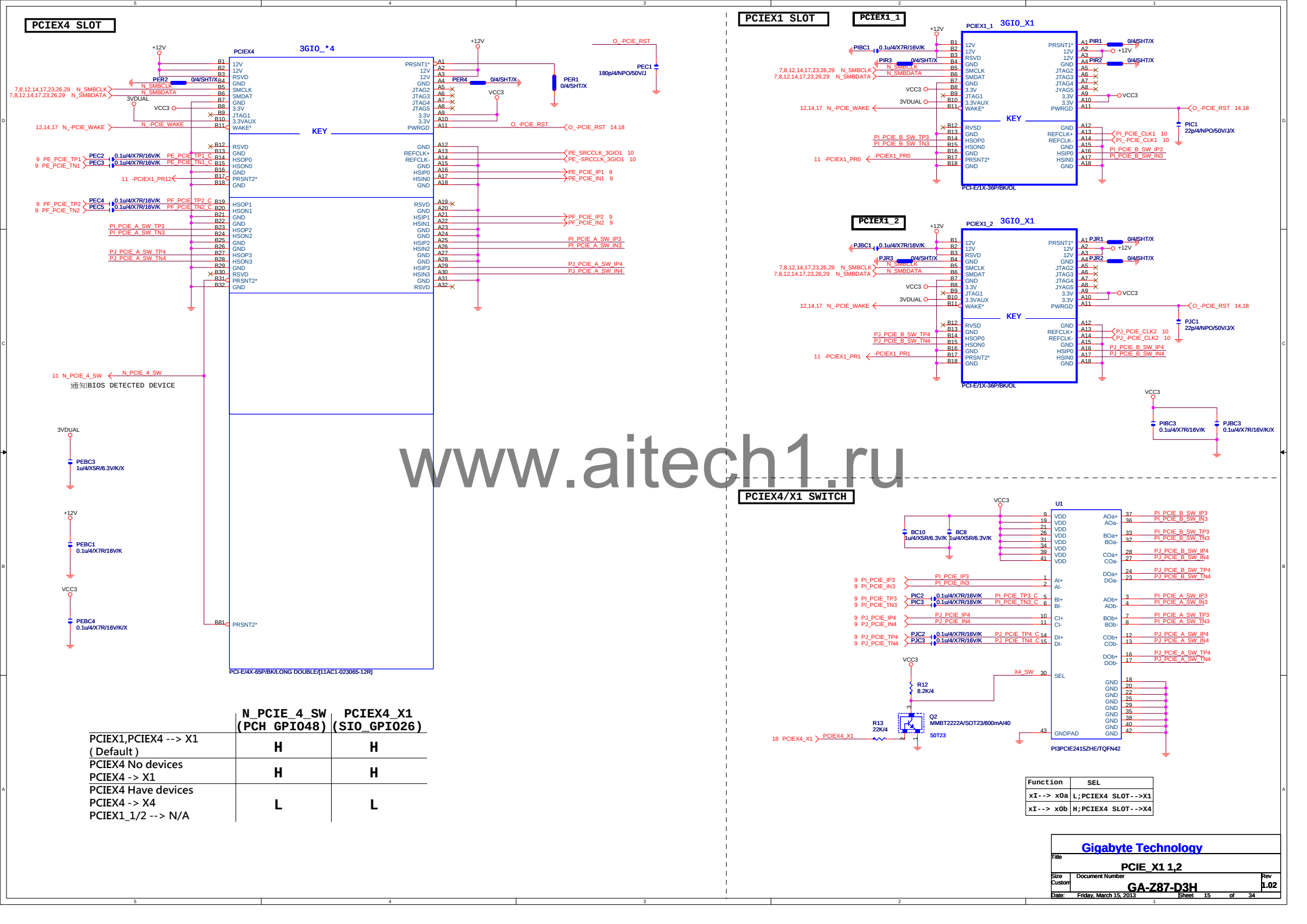

	N_PCIE_4_SW (PCH GPIO48)	PCIEX4_X1 (SIO_GPIO26)
PCIEX1,PCIEX4 --> X1 (Default)	H	H
PCIEX4 No devices PCIEX4 -> X1	H	H
PCIEX4 Have devices PCIEX4 -> X4 PCIEX1_1/2 --> N/A	L	L

Function	SEL
xI--> xOa	L;PCIEX4 SLOT-->X1
xI--> xOb	H;PCIEX4 SLOT-->X4

Gigabyte Technology

Title: PCIE_X1 1,2

Size: Custom | Document Number: GA-Z87-D3H | Rev: 1.02

Date: Friday, March 15, 2013 | Sheet 15 of 34

www.aitech1.ru

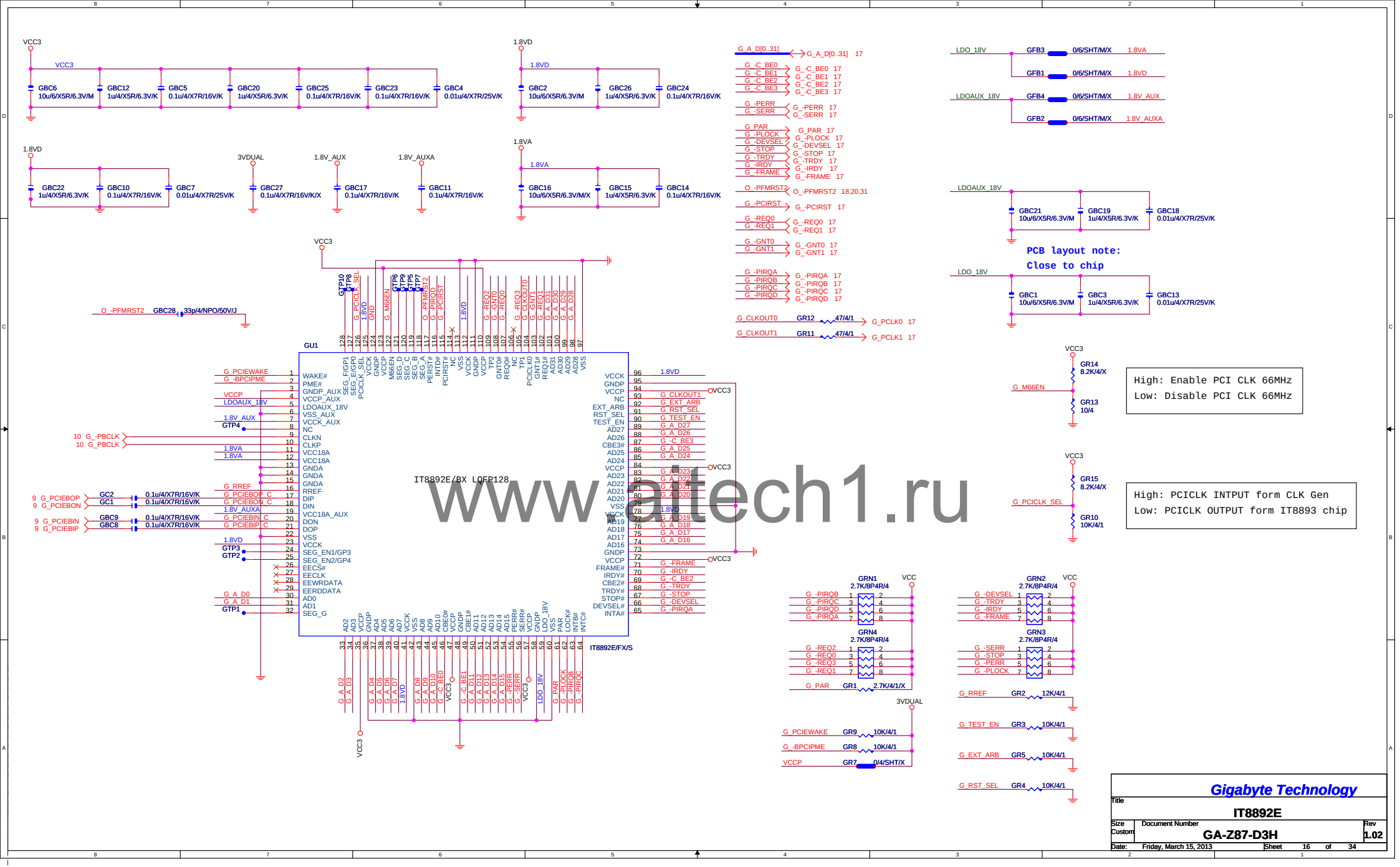

www.altech1.ru

Gigabyte Technology	
Title	IT8892E
Size Custom	Document Number GA-Z87-D3H
Rev	1.02
Date: Friday, March 15, 2013	Sheet 16 of 34

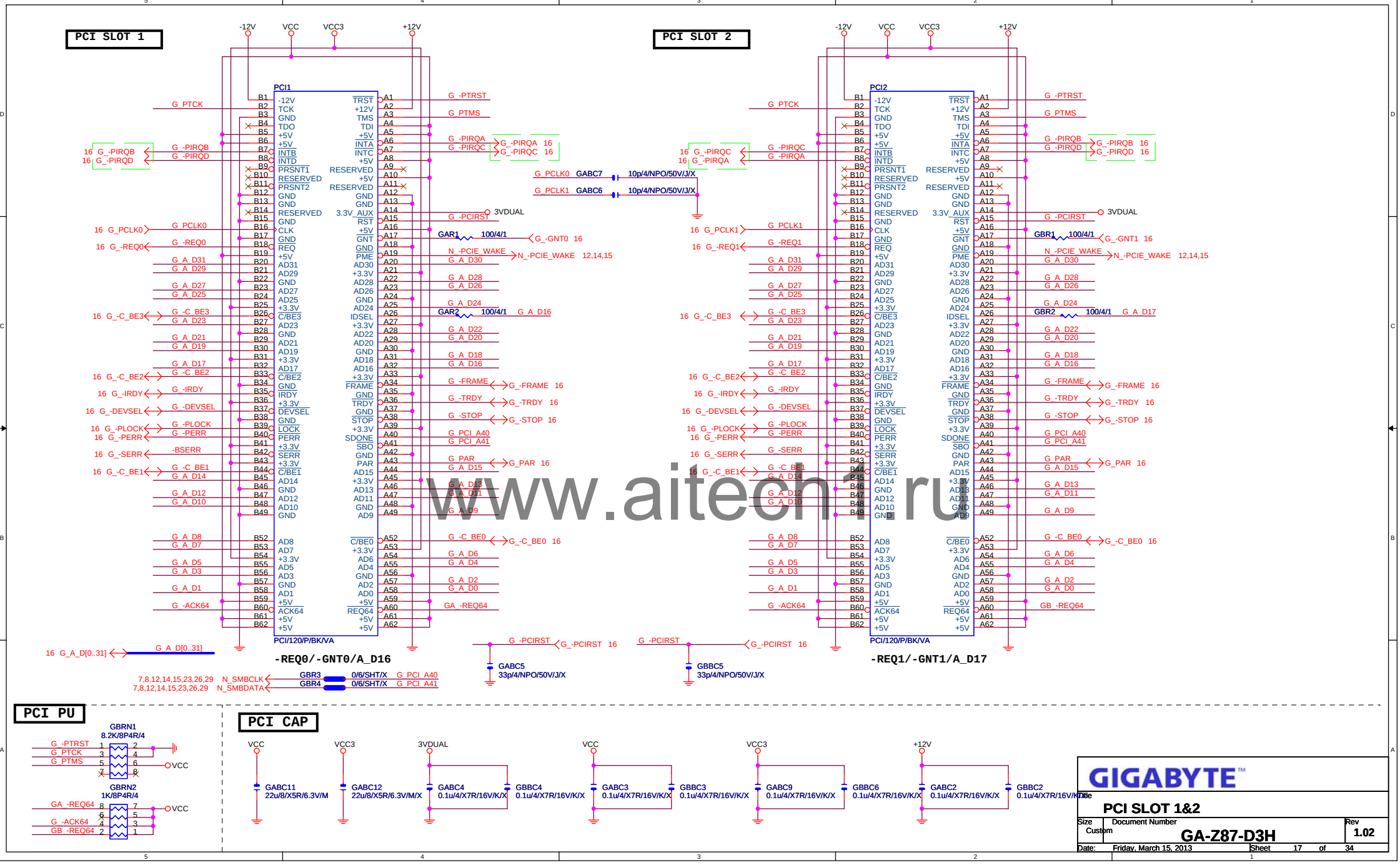

www.aitech.ru

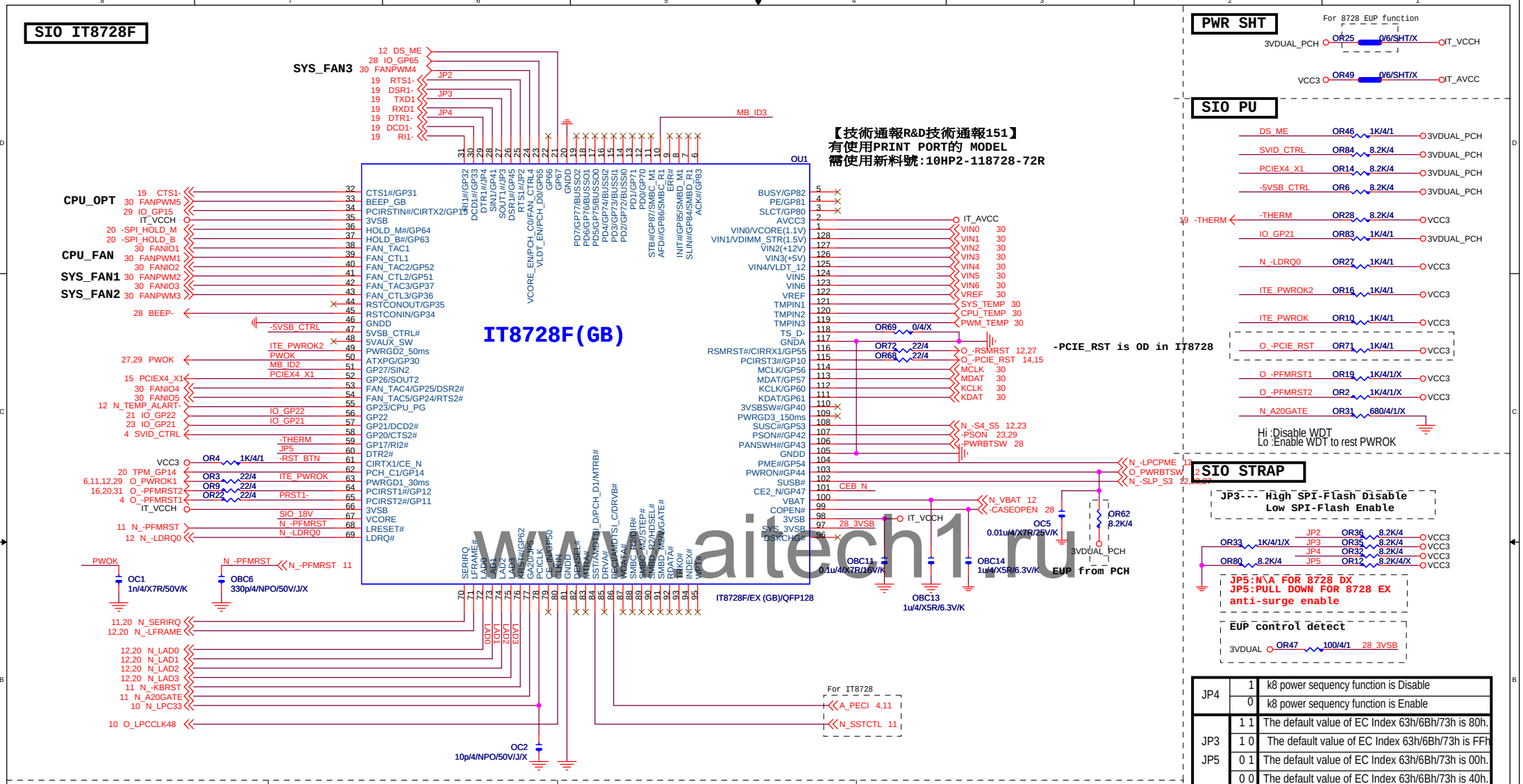

JP4	1	k8 power sequency function is Disable
	0	k8 power sequency function is Enable
JP3 JP5	1 1	The default value of EC Index 63h/6Bh/73h is 80h.
	1 0	The default value of EC Index 63h/6Bh/73h is FFh
	0 1	The default value of EC Index 63h/6Bh/73h is 00h.
	0 0	The default value of EC Index 63h/6Bh/73h is 40h.

	IT8728
PIN121	VCORE_EN/PCH_C0
PIN120	VLDT_EN/PCH_D0
PIN19	ATXPG
PIN31	PCH_C1
PIN53	SST/AMDTSI_D/MTRB#/PCH_D1
PIN55	PECI/AMDTSI_C/DRVB#
PIN66	SYS_3VSB
PIN70	GP47
PIN95	VIN2(VCC5)
PIN96	VIN1(VCC12)
PIN97	VIN1/VDIMM_STR(1.5V)
PIN98	VIN0/VCORE(1.1V)/NC

www.aitech1.ru

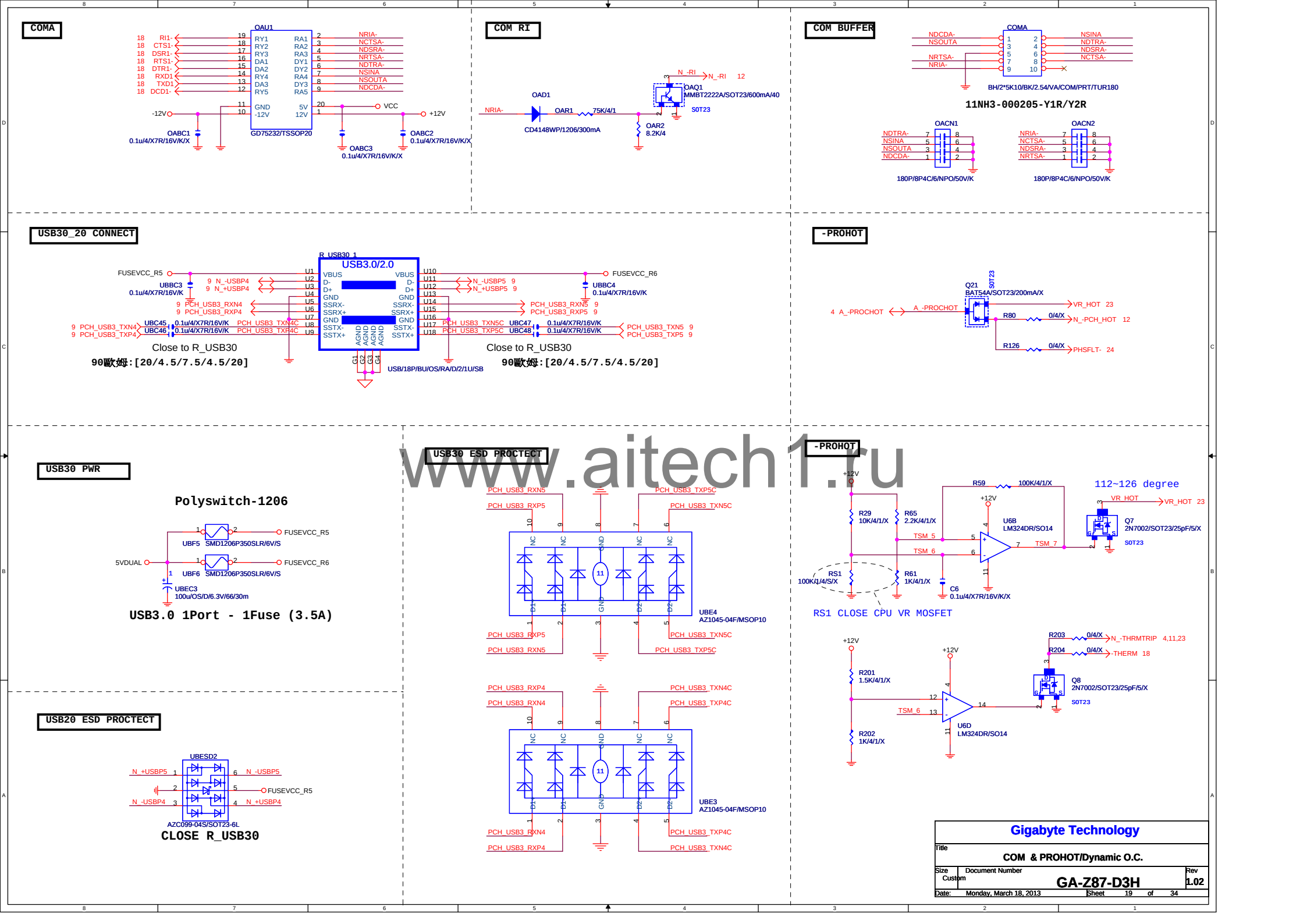

www.aitech1.ru

DUAL BIOS

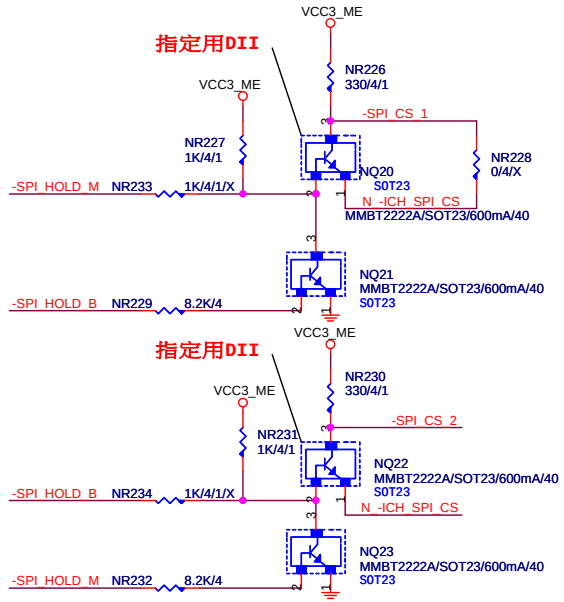

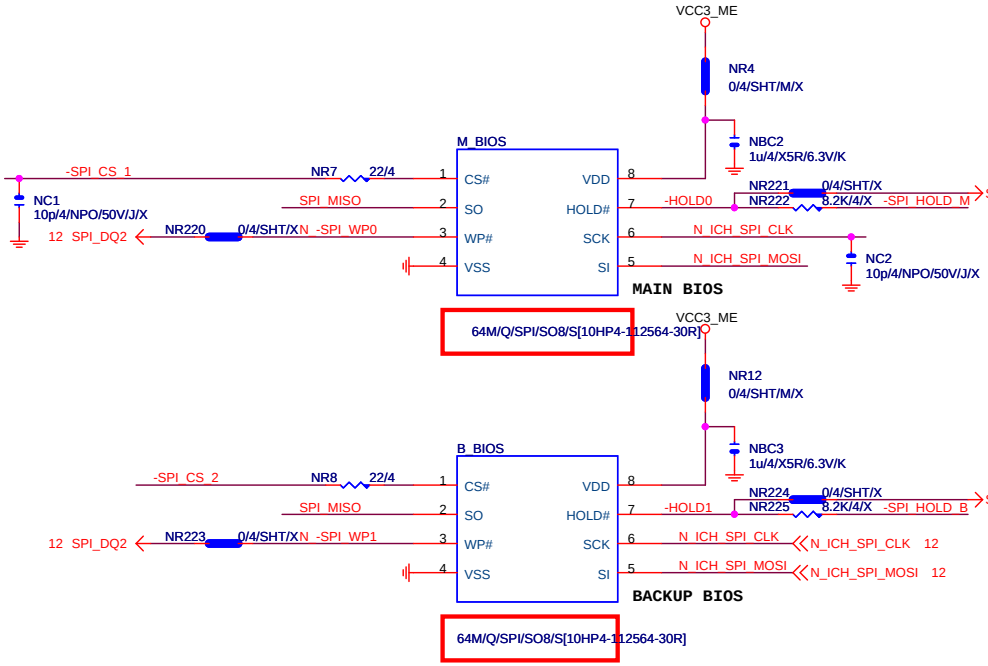

MOSI For DMI RX Termination Voltage

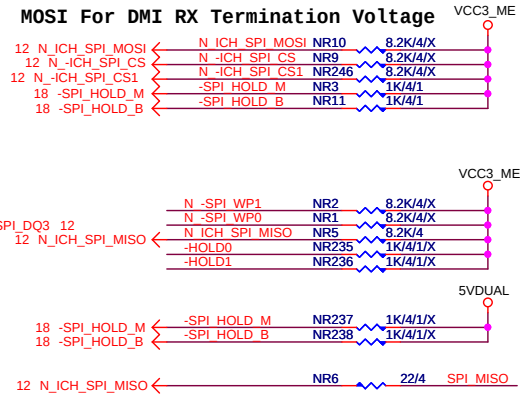

BOOT DEVICE	GNT0	GNT1
LPC	0	0
PCI	0	1
NAND	1	0
SPI	1	1

1 means floating
0 means PD 1K

www.aitech1.ru

TPM CONNECT

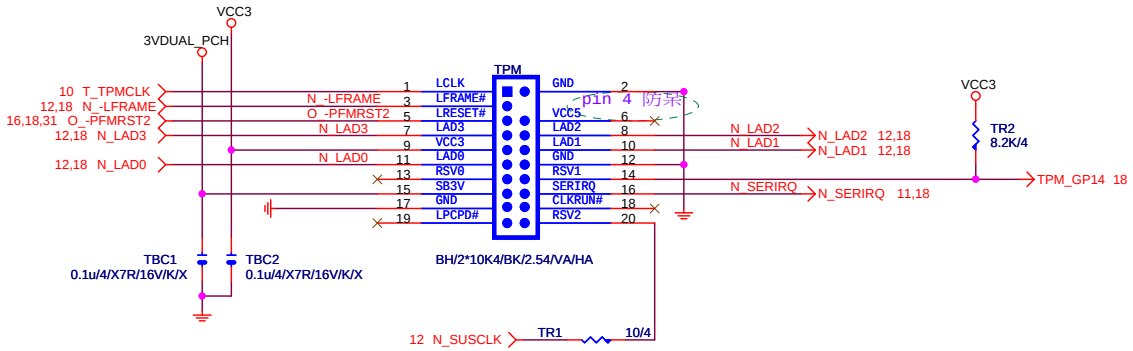

Gigabyte Technology			
Title	BIOS		
Size Custom	Document Number GA-Z87-D3H		Rev 1.02
Date: Wednesday, March 20, 2013	Sheet 20 of 34		

AZALIA CODEC

ALC892/ALC887-VD2/VT1708-CE Colay

	ALC892	ALC887-VD2	VT1708S-CE
CR44/CBC26	47ohm+1nF	47ohm+1nF	22ohm+100P
CBC42/CBC43	X	X	100P/4
CR16/CR19 CR52/CR56/CR10/CR9	8.2K/4	8.2K/4	3.3K/4/1
CR6/CR7/CR58/CR54/ CR67/CR68/CR69/CR70	22K/4	22K/4	10K/4/1
CR5/CR8/CR1/CR14/ CR17/CR22/CR73/CR74/ CR13/CR11/CR57/CR53/ CR75/CR76	62 ohm	62 ohm	75 ohm
CR51/CD1/CBC7	O	O	O
CESD1	X	O	O

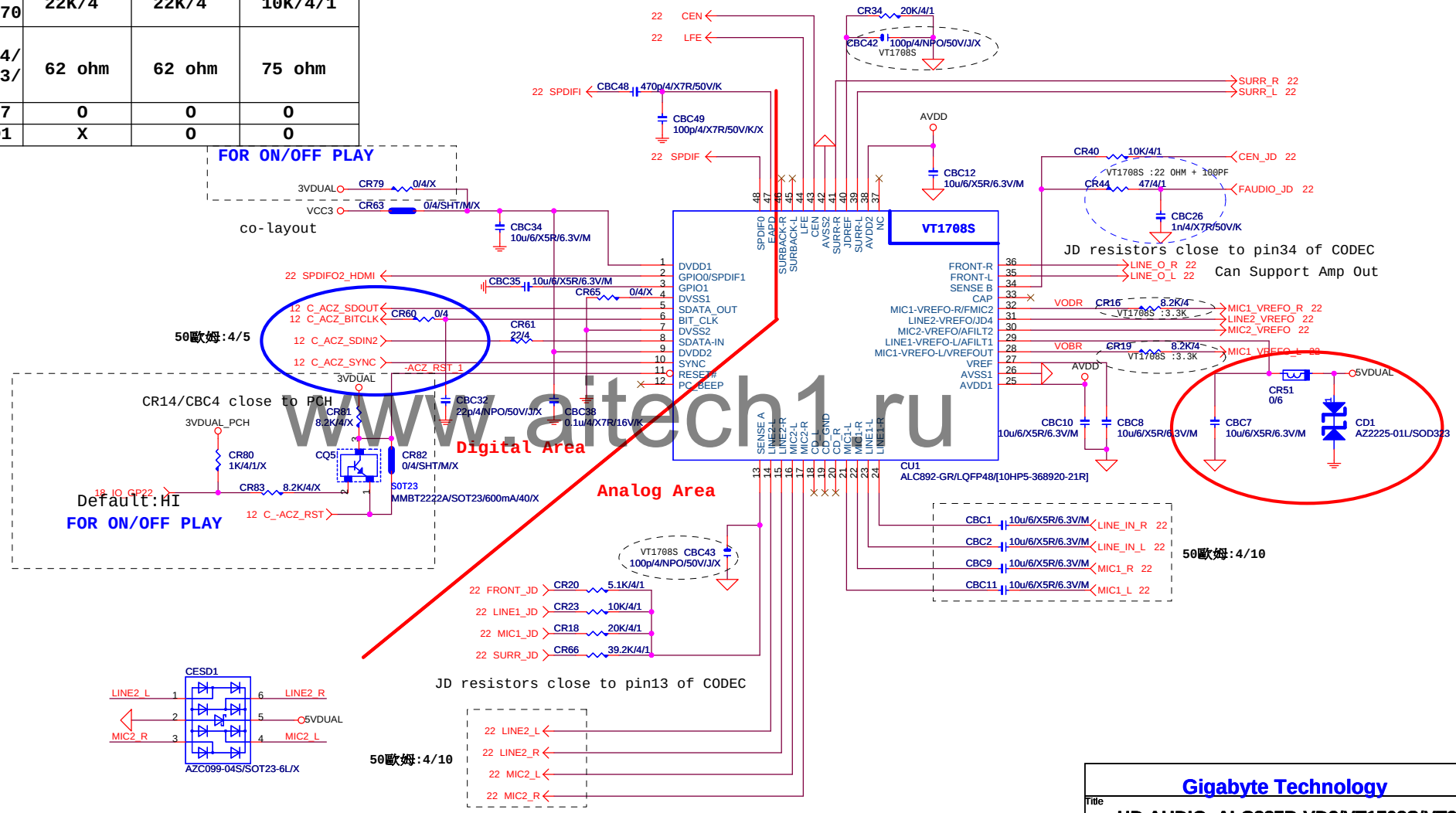

www.aitech1.ru

Gigabyte Technology

Title: HD AUDIO ALC887B-VD2/VT1708S/VT2021

Size: Custom | Document Number: GA-Z87-D3H | Rev: 1.02

Date: Friday, March 15, 2013 | Sheet 21 of 34

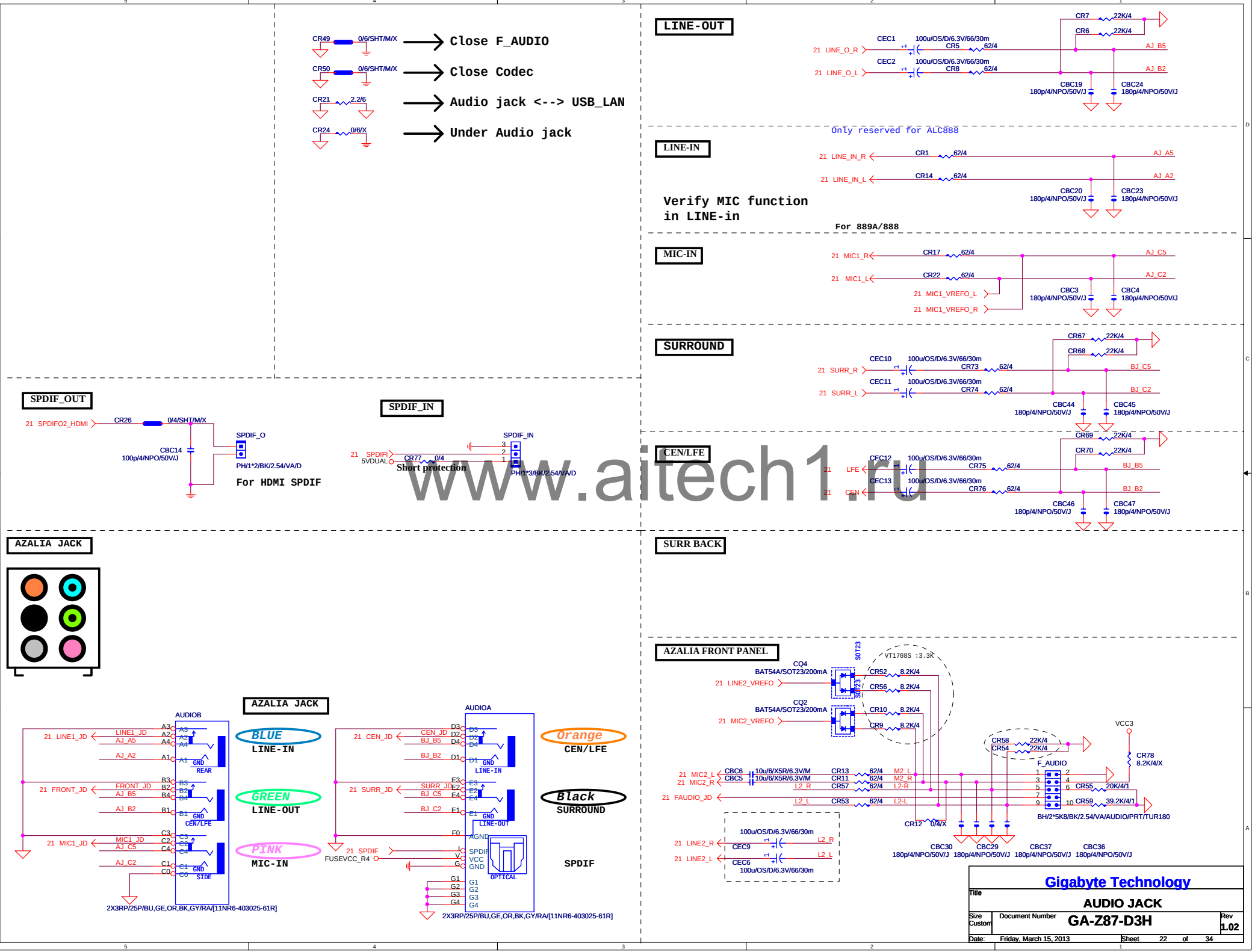

www.aitech1.ru

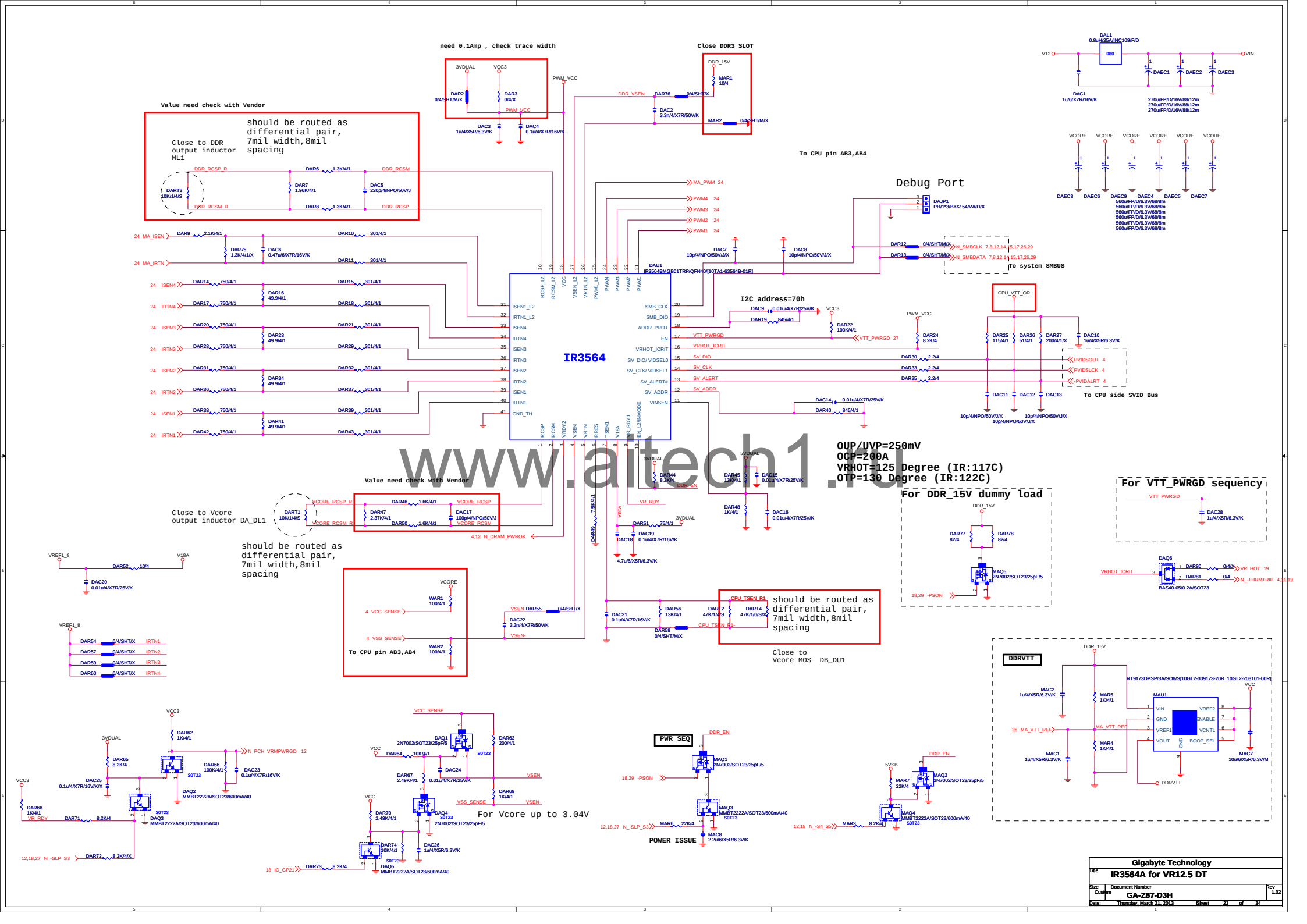

www.aitech1.ru

VCORE

VCORE-PHASE1

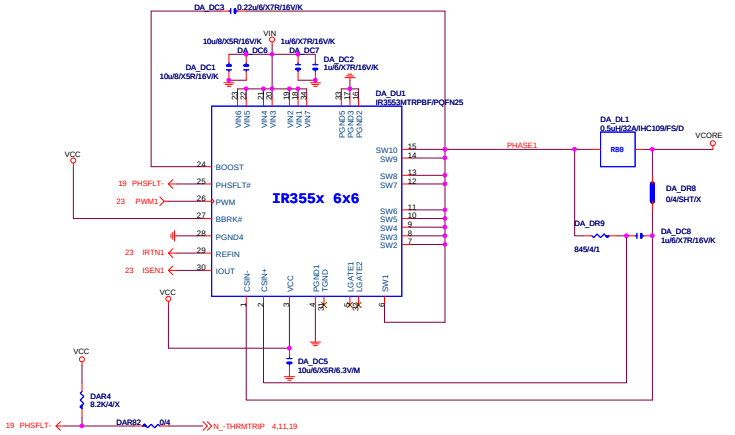

VCORE-PHASE3

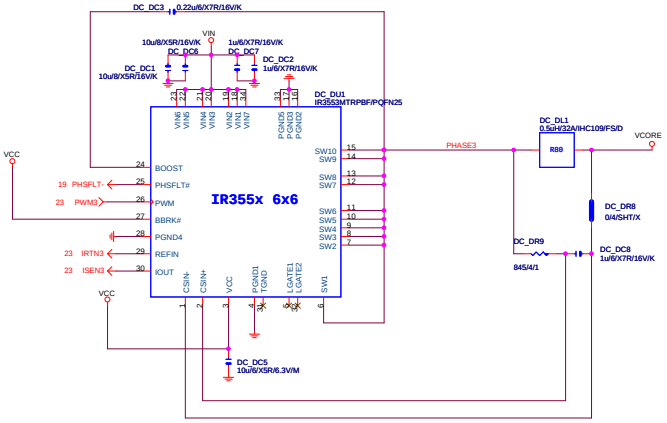

VCORE-PHASE2

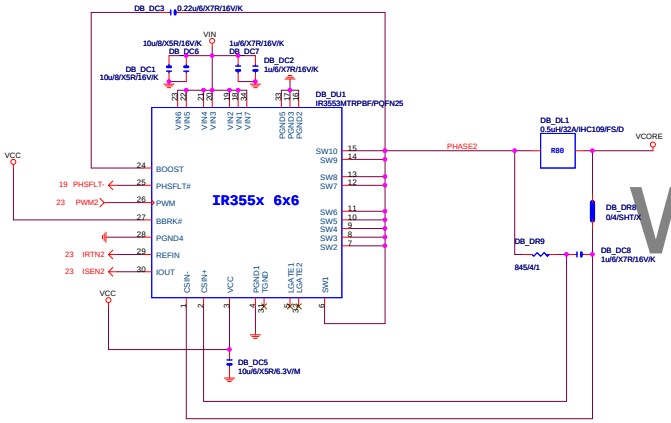

VCORE-PHASE4

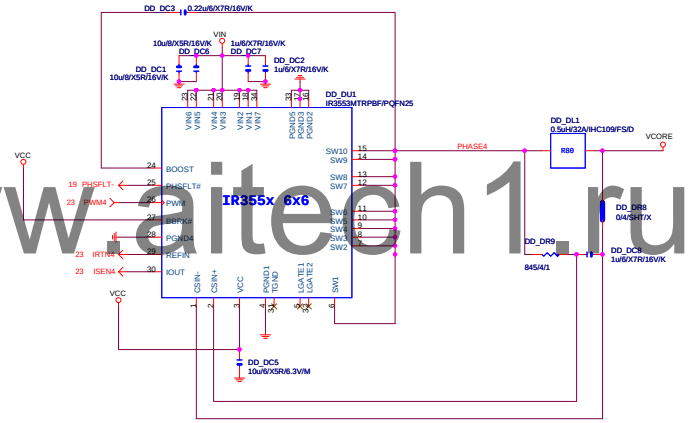

www.aitech1.ru

MOSFET HEATSINK

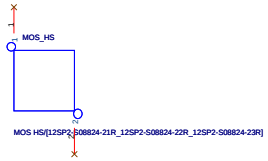

DDR_15V

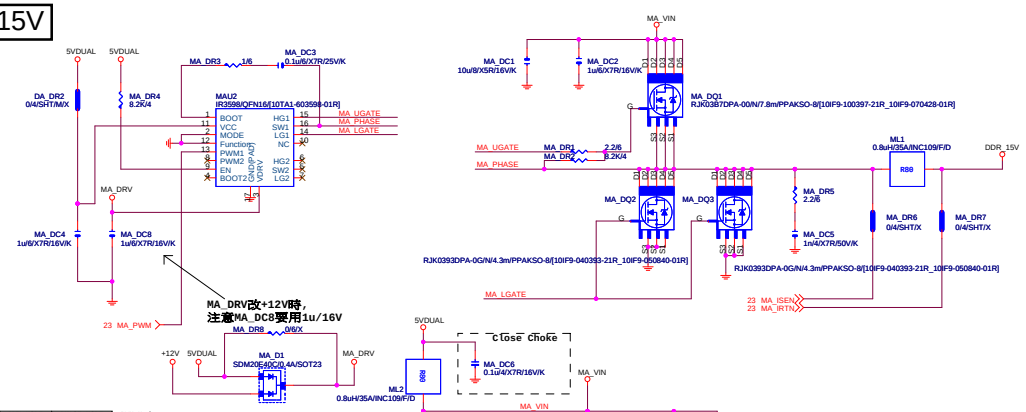

FUNCTION	MODE	PWM MODE	PHASE MODE
0	1	IR ATL	DUAL
1	1	IR ATL	Doubler
0	0	Tri-Ssate	DUAL
1	0	Tri-Ssate	Doubler
OPEN	0	Tri-Ssate	Quad
OPEN	1	IR ATL	Quad

In Quad mode , IC1 pin10 link to IC2 pin10
IC1 pin9 link to IC2 pin9 without PU

PWM Mode
IR ATL : 1.8V --> Hi (fastest response)
Tri-state : 3.3V --> Hi (抗雜訊)

Title	Gigabyte Technology CPU CORE VR
Size Custom	Document Number GA-Z87-D3H
Rev	1.02
Date: Thursday, March 21, 2013	Sheet 24 of 34

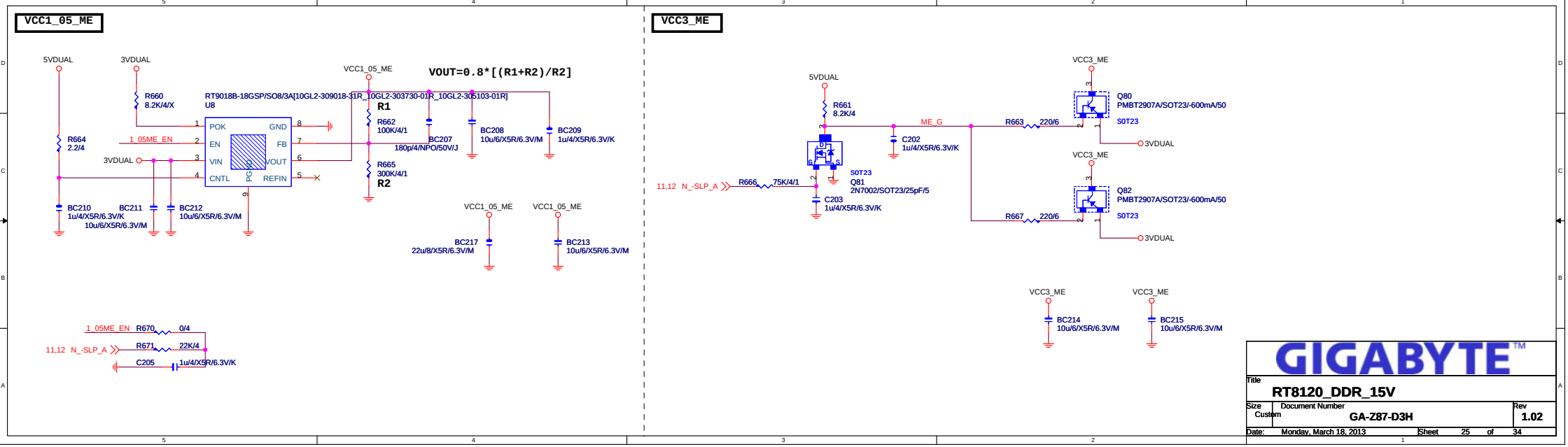

GIGABYTE™

Title: RT8120_DDR_15V		
Size: Custom	Document Number: GA-Z87-D3H	Rev: 1.02
Date: Monday, March 18, 2013	Sheet 25 of 34	

www.aitech1.ru

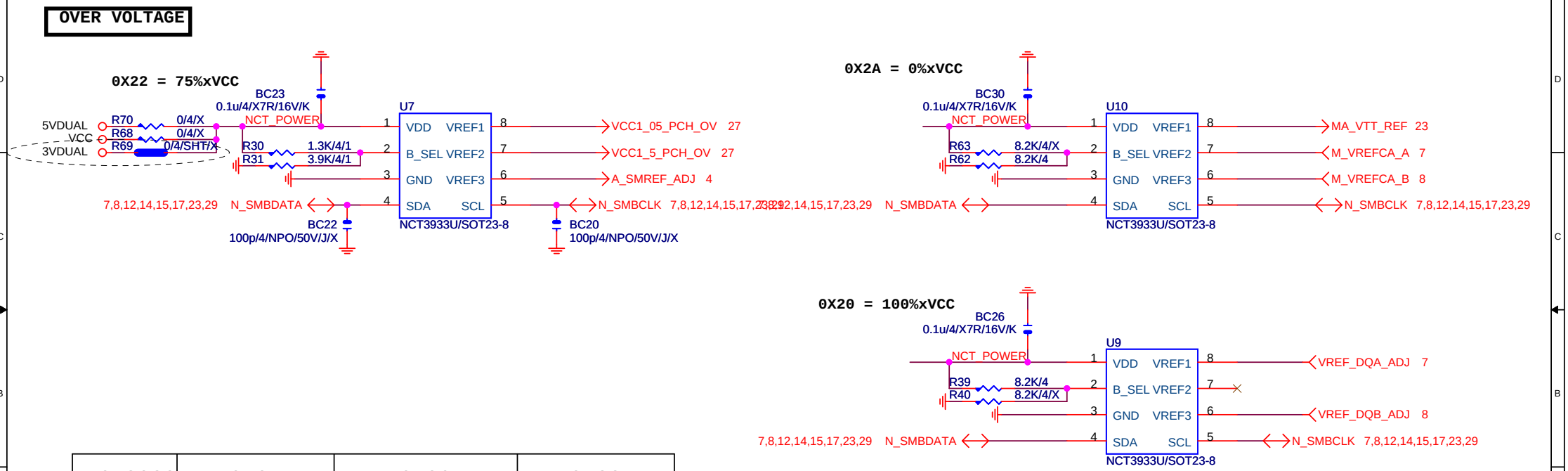

NCT3933	0X2A	0X20	0X22
VREF1	DDRVTT	VREF_DDRA_DQ	PCH Core
VREF2	VREF_DDRA_CA	N/A	VCC1_5_PCH
VREF3	VREF_DDRA_CA	VREF_DDRB_DQ	SMREF

www.aitech1.ru

Gigabyte Technology			
Title	CPU CORE VR-2		
Size Custom	Document Number GA-Z87-D3H		Rev 1.02
Date: Friday, March 15, 2013	Sheet 26 of 34		

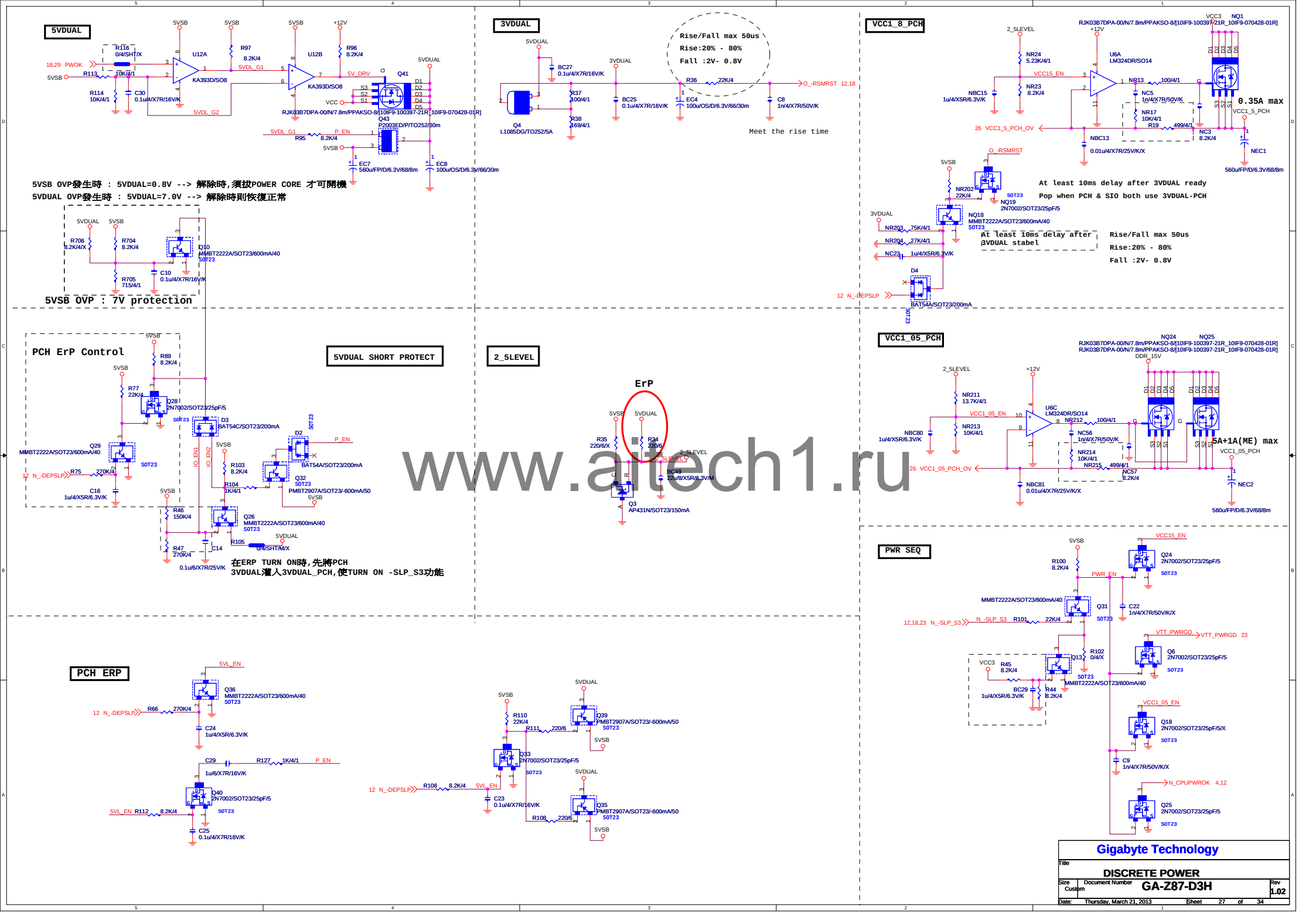

www.aitech1.ru

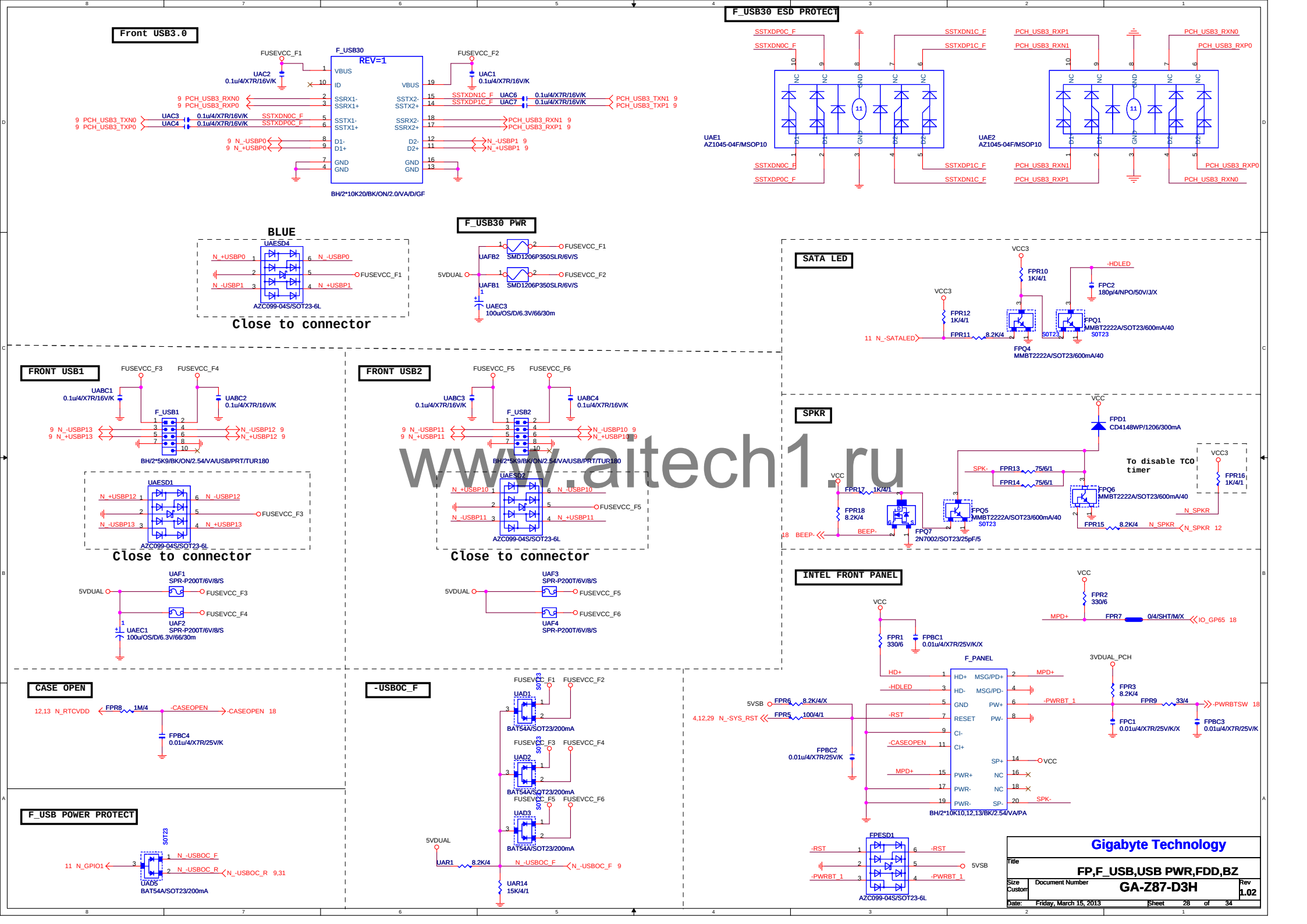

www.aitech1.ru

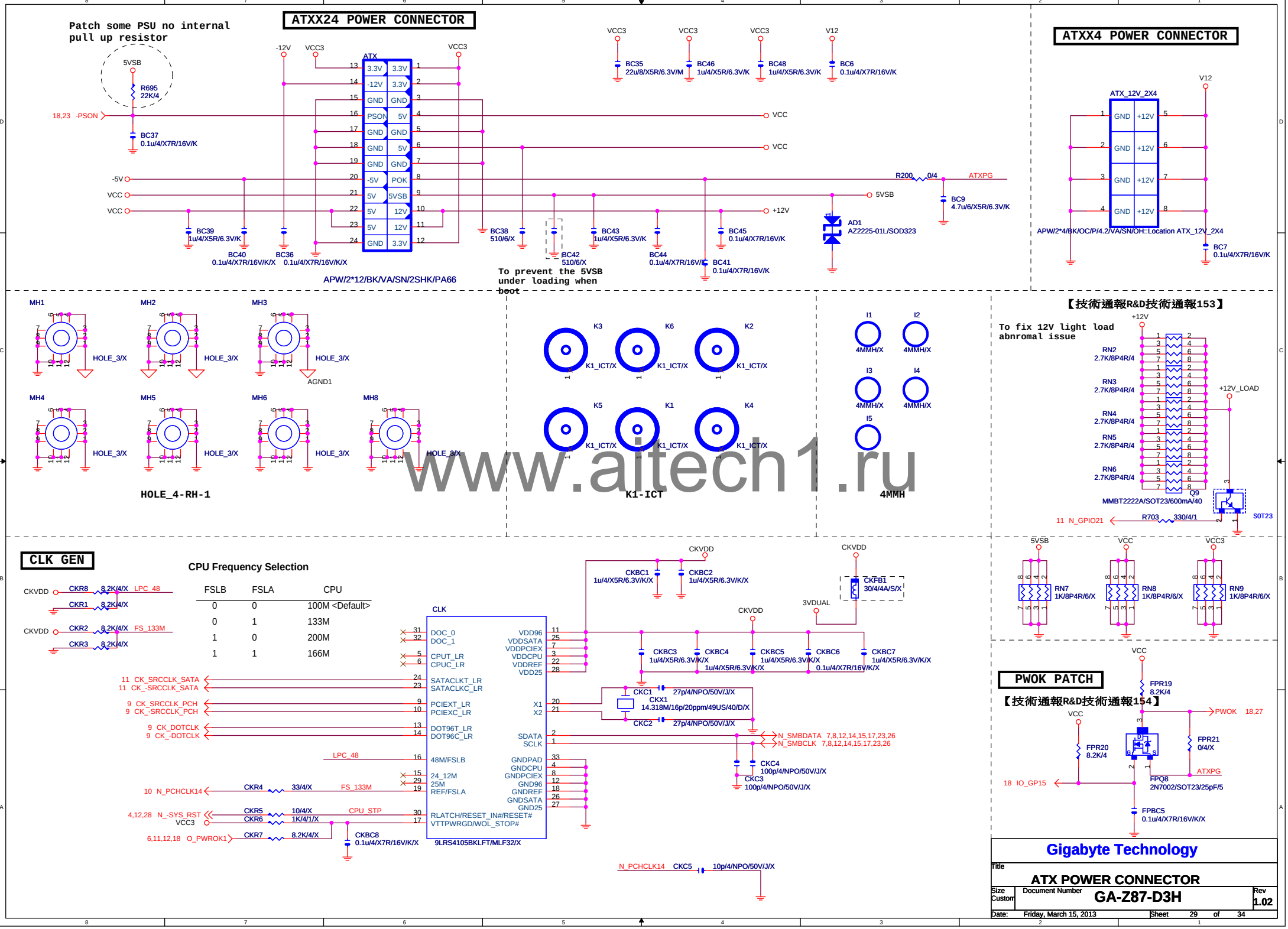

www.aitech1.ru

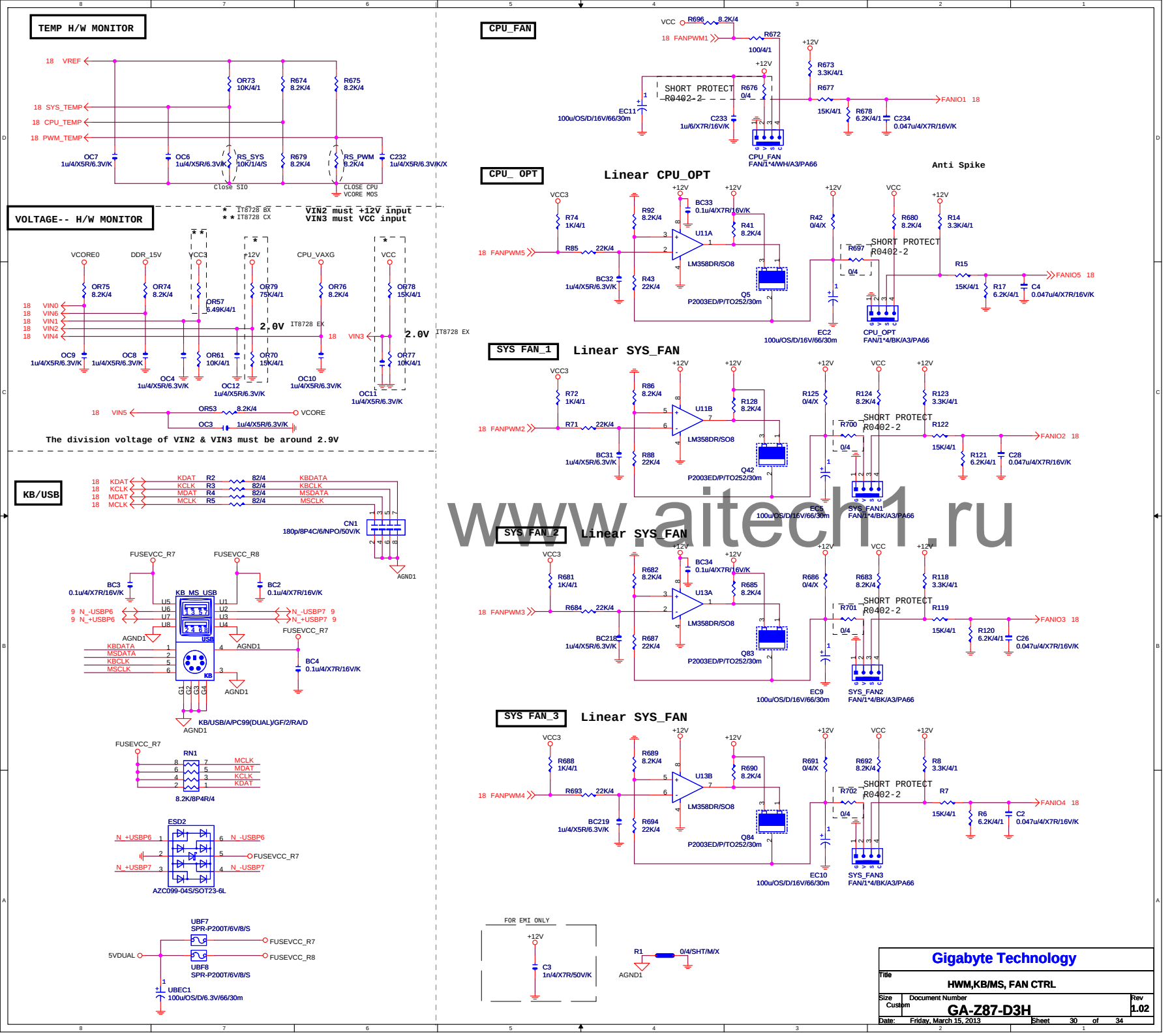

www.aitech1.ru

LAN:INTEL I217

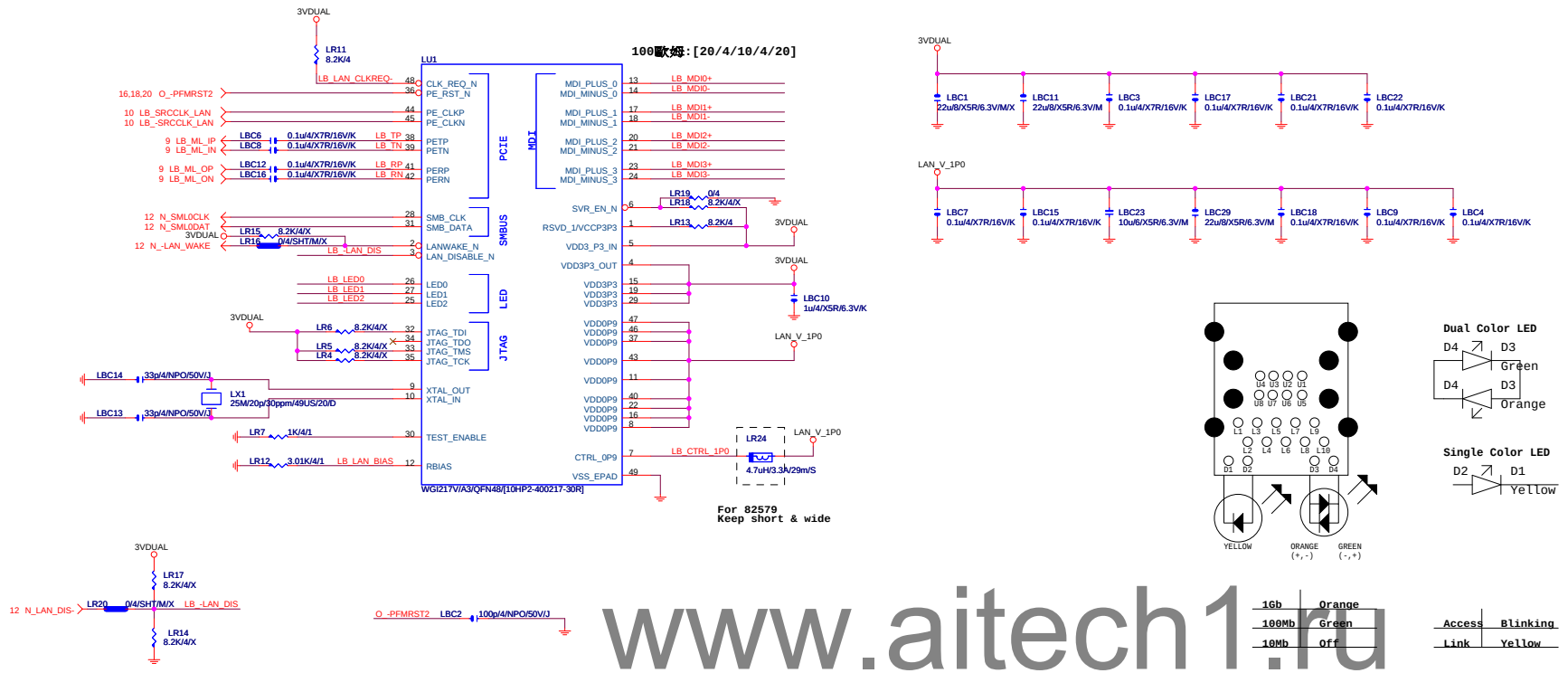

1Gb	Orange
100Mb	Green
10Mb	Off

Access	Blinking
Link	Yellow

www.aitech1.ru

USB30_LAN CONNECTOR

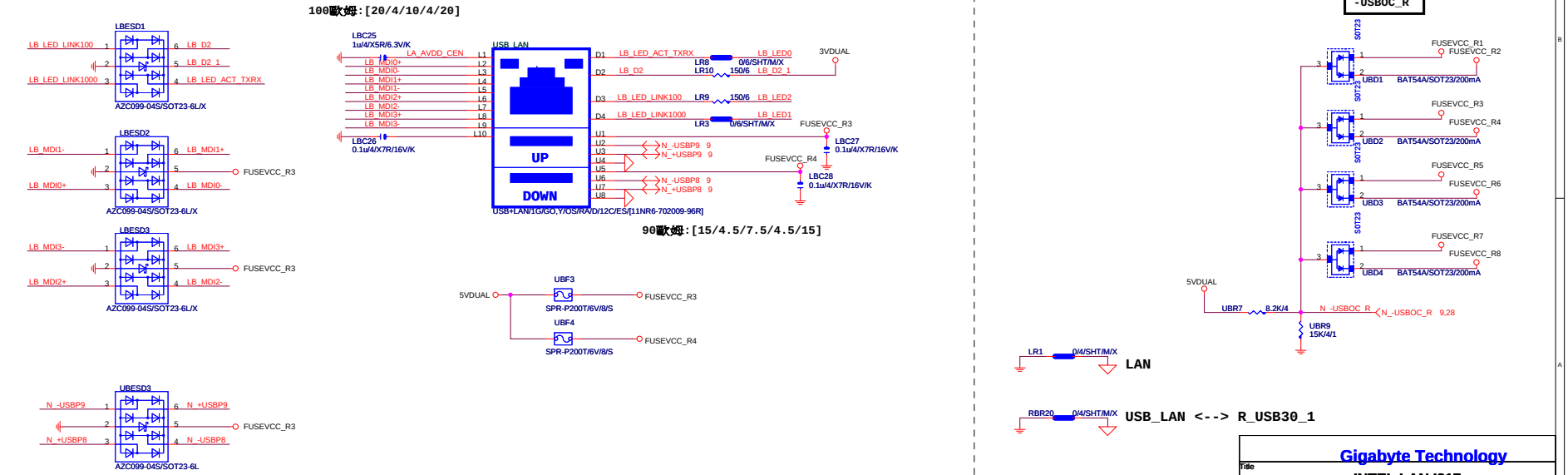

Title	INTEL LAN I217
Size	Custom
Document Number	GA-Z87-D3H
Rev	1.02
Date:	Friday, March 29, 2013
Sheet	31 of 34

Gigabyte Technology

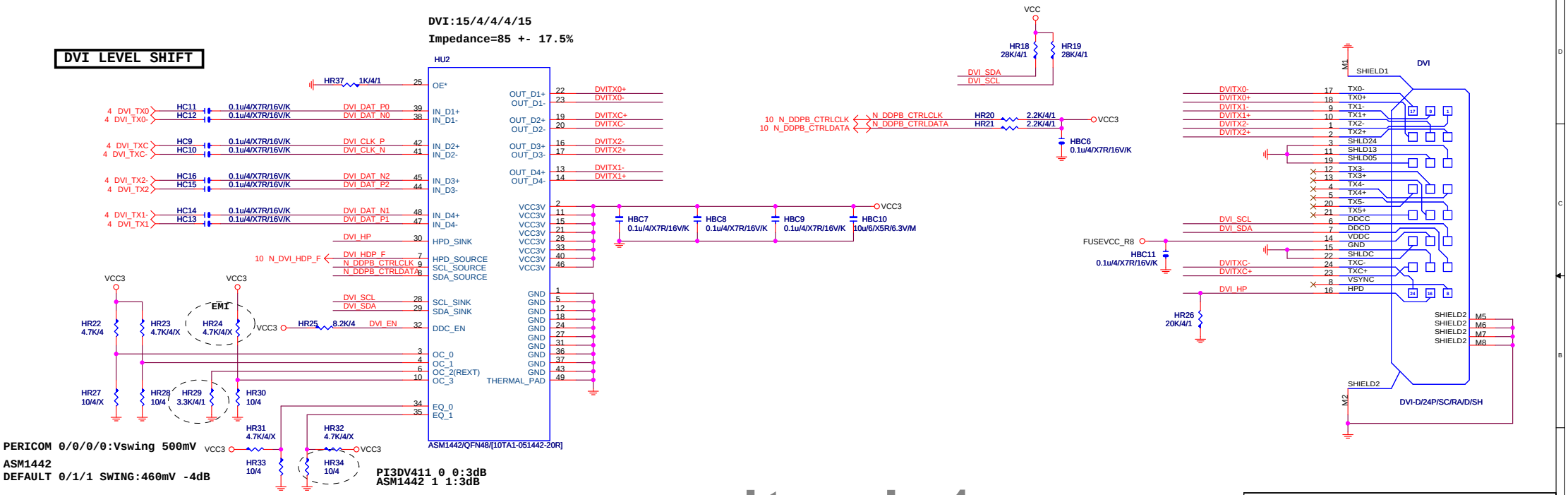

www.aitech1.ru

Gigabyte Technology		
Title: TI TSB43AB23 1394		
Size: Custom	Document Number: GA-H87-D3H	Rev: 1.02
Date: Thursday, March 28, 2013	Sheet 32 of 34	

HDMI LEVEL SHIFT

HDMI:15/4/4/4/15
Impedance=85 +- 17.5%

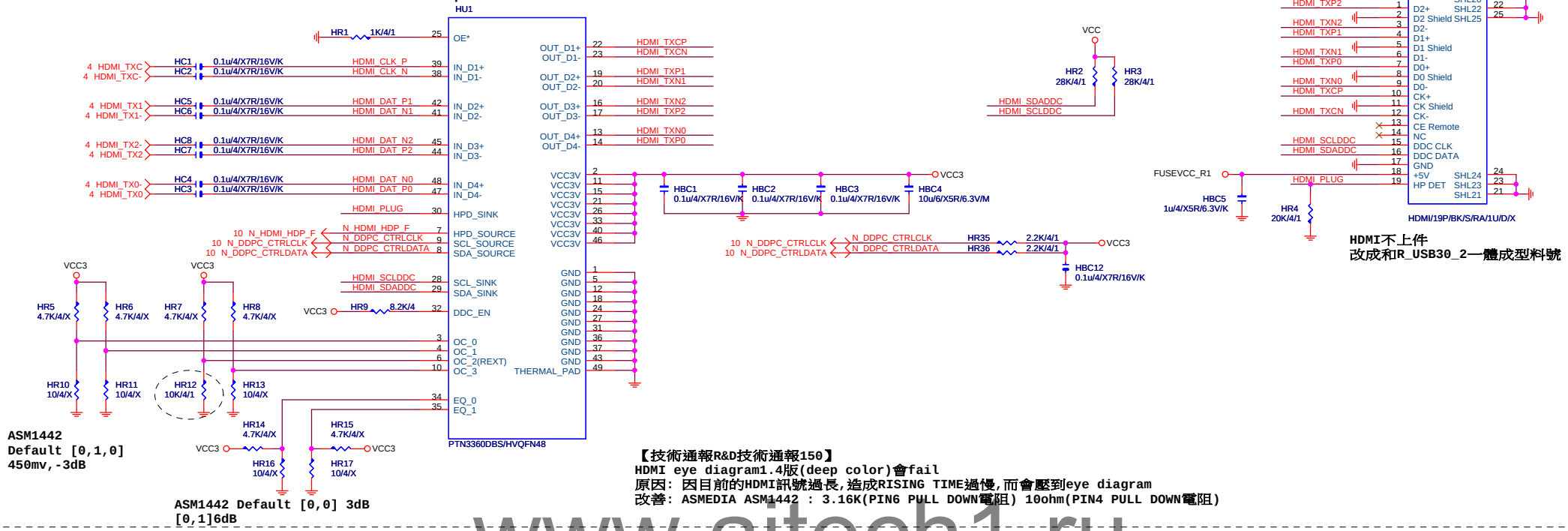

ASM1442
Default [0,1,0]
450mv,-3dB

ASM1442 Default [0,0] 3dB
[0,1]6dB

【技術通報R&D技術通報150】
HDMI eye diagram1.4版(deep color)會fail
原因: 因目前的HDMI訊號過長,造成RISING TIME過慢,而會壓到eye diagram
改善: ASMEDIA ASM1442 : 3.16K(PIN6 PULL DOWN電阻) 10ohm(PIN4 PULL DOWN電阻)

www.aitech1.ru

R_USB30

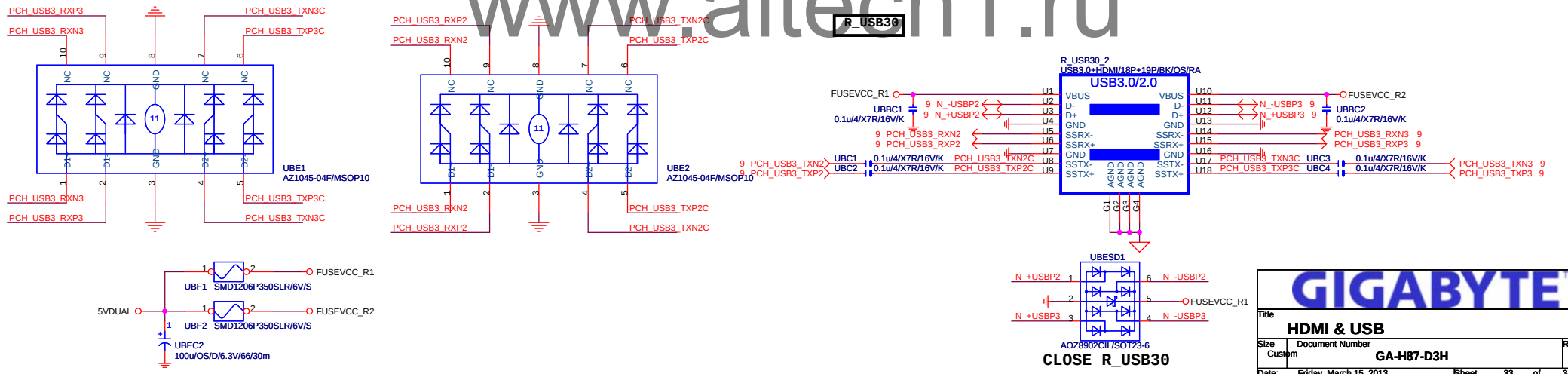

CLOSE R_USB30

GIGABYTE™

Title	HDMI & USB	
Size: Custom	Document Number: GA-H87-D3H	Rev: 1.02
Date: Friday, March 15, 2013	Sheet 33 of 34	

PCH GPIO LIST TABLE

PIN NAME	PWR	AFTER/PLTRST	Default	USAGE	NOTE
GP0	MAIN	H-Z	GPI	GPIO0	N/A
GP1/TACH1	MAIN		GPI	GPIO1	N/A
GP2/PIRQE#	MAIN		GPI	-PIRQE	P/U 8.2K VCC3
GP3/PIRQF#	MAIN		GPI	-PIRQF	P/U 8.2K VCC3
GP4/PIRQG#	MAIN		GPI	-PIRQG	P/U 8.2K VCC3
GP5/PIRQH#	MAIN		GPI	-PIRQH	P/U 8.2K VCC3
GP6/TACH2	MAIN		GPI	PCIEX1 Detect	P/U 8.2K VCC3
GP7/TACH3	MAIN		GPI	GPIO7	P/U 8.2K VCC3
GP8	STBY	H	GPI	GPIO8	N/A
GP9/OC5#	STBY		NATIVE	USB OC5#	N/A
GP10/OC6#	STBY		NATIVE	USB OC6#	N/A
GP11/SMBALERT#	STBY		NATIVE	USB PWR protect	P/U 8.2K 3VDUAL
GP12	STBY	L	GPI	GPIO12	N/A
GP13	STBY	L	GPI	LPCPME#	P/U 8.2K 3VDUAL
GP14/OC7#	STBY		NATIVE	USB OC7#	N/A
GP15	STBY	L	GPI	GPIO15(TLS Enable)	P/U 8.2K 3VDUAL
GP16	MAIN		GPI	GPIO16	P/U 8.2K VCC3
GP17/TACH0	MAIN		GPI	GPIO17	P/U 8.2K VCC3
GP18	MAIN		GPI	Mobile Only	N/A
GP19	MAIN		GPI	GPIO19	P/U 8.2K VCC3
GP20	MAIN		GPI	GPIO20	P/U 8.2K VCC3
GP21	MAIN		GPI	GPIO21	P/U 8.2K VCC3
GP22	MAIN	H-Z	GPI	GPIO22	P/U 8.2K VCC3
GP23	MAIN		GPI	GPIO23	N/A
GP24	STBY	L	GPI	SKTOCC#	N/A
GP25	STBY			Mobile Only	N/A
GP26	STBY			Mobile Only	N/A
GP27	STBY	H	GPO	GPIO27	P/U 8.2K 3VDUAL
GP28	STBY	H	GPO	PWR LED	P/U 8.2K 3VDUAL
GP29	STBY	L	GPI	GPIO29	N/A
GP30	STBY	H-Z	GPI	Mobile Only	N/A
GP31	STBY	H-Z	GPI	Mobile Only	N/A
GP32	MAIN	H	GPO	N/A	N/A
GP33	MAIN	H	GPO	N/A	N/A
GP34	MAIN	H-Z	GPI	-PCI_STOP	P/U 8.2K VCC3
GP35	MAIN	L	GPO	-ACZ_DET	P/U 8.2K VCC3
GP36	MAIN		GPI	N/A	N/A
GP37	MAIN		GPI	N/A	N/A
GP38	MAIN	H-Z	GPI	PCIEX4 Detect	P/U 8.2K VCC3
GP39	MAIN	H-Z	GPI	GPIO39	P/U 8.2K VCC3
GP40	STBY		NATIVE	USB OC1#	N/A
GP41	STBY		NATIVE	USB OC2#	N/A
GP42	STBY		NATIVE	USB OC3#	N/A
GP43	STBY		NATIVE	USB OC4#	N/A
GP44	STBY	L	NATIVE	GPIO44	P/U 8.2K 3VDUAL
GP45	STBY		NATIVE	GPIO45	P/U 8.2K 3VDUAL
GP46	STBY	L	NATIVE	GPIO46	P/U 8.2K 3VDUAL
GP47	STBY			Mobile Only	N/A
GP48	MAIN	H-Z	IN	GPIO48	P/U 8.2K 3VDUAL
GP49	MAIN	H-Z	IN	GPIO49	P/U 8.2K 3VDUAL
GP50	MAIN		NATIVE	-REQ1	P/U 2.2K VCC
GP51	MAIN	H	NATIVE	-GNT1	N/A
GP52	MAIN		NATIVE	-REQ2	P/U 2.2K VCC
GP53	MAIN	H	NATIVE	-GNT2	N/A
GP54	MAIN		NATIVE	-REQ3	P/U 2.2K VCC
GP55	MAIN	H	NATIVE	-GNT3	N/A
GP56	STBY		NATIVE	Mobile Only	N/A
GP57	STBY	H-Z	IN	VCORE_OV1	P/U 8.2K 3VDUAL
GP58	STBY	H-Z	NATIVE	F_USB_OC	P/U 8.2K 3VDUAL
GP59	STBY		NATIVE	USB_OC0#	N/A
GP60	STBY	H-Z	NATIVE	N/A(Reverse)	P/U 8.2K 3VDUAL
GP61	STBY	L	NATIVE	-SUSTAT	N/A
GP62	STBY	L	NATIVE	SUSCLK	N/A
GP63	STBY	L	NATIVE	GPIO63	N/A
GP64	MAIN	L	NATIVE	CLKOUTFLEX0	N/A
GP65	MAIN	L	NATIVE	CLKOUTFLEX1	N/A
GP66	MAIN	L	NATIVE	CLKOUTFLEX2	N/A
GP67	MAIN	L	NATIVE	CLKOUTFLEX3	N/A
GP72	STBY	H-Z	NATIVE	VCORE_OV4	P/U 8.2K 3VDUAL
GP73	STBY			Mobile Only	N/A
GP74	STBY	H-Z	NATIVE	1_05V_OV2	P/U 8.2K 3VDUAL
GP75	STBY	H-Z	NATIVE	N/A(Reverse)	P/U 8.2K 3VDUAL

Super I/O ITE8720 GPIO Table

PIN NAME	USAGE	NOTE
SVC/PECI_RQT/GP14	-PECI_REQ	
PWROK1/GP13	PWROK1/ITE_PWROK	
KRST#/GP62	-KBRST	
SO/GP50	-ICH_SPI_CS	
IRTX/GP47/CE2_N/JP7	CEB_N	
GP46/IRRX	-LAN2_DSM	
PSION#/GP42	-PSON	
PWROK2#/GP41	PECI_CTL	
PCIRST3#/GP10/VDIMM_STR_EN	-PCIE_RST	
RSMRST#CIRRX1/GP55	-RSMRST	
PME#/GP54	-LPCPME	
PD5/GP75/BUSSO0	N/A	

PIN NAME	USAGE	NOTE
FAN_TAC2/GP52	FANIO2	
FAN_TAC3/GP37	FANIO3	
VIDO3/FAN_TAC4/GP25/DSR2#	FANIO4	
FAN_CTL2/GP51	FANPWM2	
FAN_CTL3/GP36	FANPWM3	
VID4/GP34	BEEP-	
VID3/GP33	TURBO1	
VID2/GP32	TURBO0	
VCORE_GOOD/VID6/GP63	CPUT_LED1_C	
VID5/GP35	CPUT_LED2_C	
VID1/GP31	CPUT_LED3_C	
VID0/GP30	-LAN1_DSM	NBT_LED1_C
SLCT/GP80	CPU_LED1_C	
PE/GP81	CPU_LED2_C	
BUSY/GP82	CPU_LED3_C	
PD3/GP73/BUSSI1	SB_LED1_C	
PD4/GP74/BUSSI2	SB_LED2_C	
VCORE_EN/VID7/GP64	IT_GP64	SB_LED3_C
PD0/GP70	NB_LED1_C	
PD1/GP71	NB_LED2_C	
PD2/GP72/BUSSI0	NB_LED3_C	
GP22/SCK	LOW_PWR_1	
VIDO5/GP27/SIN2	LOW_PWR_2	
PCIRST2#/GP11	-PFMRST1	
PCIRST1#/GP12	-PFMRST2	
3VSBSW#/GP40	CSI_F0	BSEL166_1
SUSC#/GP53	CSI_F1	BSEL166_2
GP23/SI	BSEL166_3/CSISBSL	
VIDO0/GP20/CTS2#	CPUT_LED1_C	BSEL166_4
GP65/VDDA_EN/GB_01	MB_ID2	
PD6/GP76/BUSSO1	MB_ID3	
PD7/GP77/BUSSO2	MB_ID4	
AFD#/GP86/SMBC_R	空 PIN	FST_2X8
INIT#/GP85/SMBD_M	SEC_2x8	GTLREF_AD2
ACK#/GP83	DDR_LED1_C	
VIDO1/GP21/DCD2#	DDR_LED2_C	
STB#/GP87/SMBC_M	DDR_LED3_C	
PWRON#GP44	VCORE_OV1	
PANSWH#/GP43	PWRBTSW	
KDAT/GP61	-PWRBTSW	
KCLK/GP60	KDAT	
MDAT/GP57	KCLK	
MACL/GP56	MDAT	
GP66/VLDT_EN/GB_02	NBT_LED1_C	MCLK
SVD/PCIRSTIN#/CIRTX/GP15	PWM2_CR	
KDAT/GP61	PWM2_CR	
GP67/CPU_PG/GB_03	EN_LOADLINE IT_GP67/-EN_PWM2	
SLIN#/GP84/SMBD_R	-EN_PWM2	
PSI_L/FAN_CLT5/CIRRX2/GP16	-THERM	
VIDO4/GP26/SOUT2	DDR18V_PH2_EN	
VIDO2/FAN_TAC5/GP24/DSR2#	DDR18V_LED	
VIDO6/GP17/RI2#	1_1V_PH_EN	
VIDO7/JP6/DTR2#	JP6	
PD5/GP75/BUSSO0	SB_LED3_C	

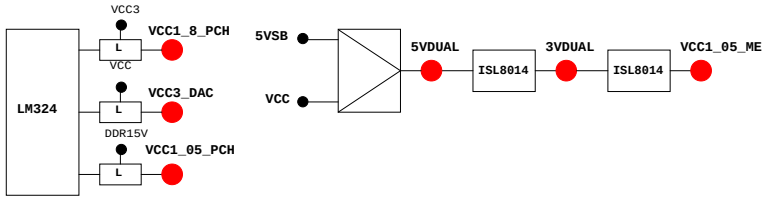

PWM各相位的擺法如下:

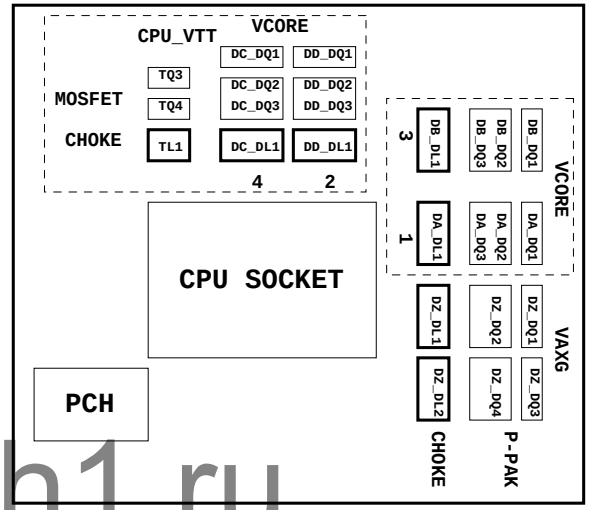

www.aitech1.ru

BIOS超電壓對應表:

線路圖名稱	BIOS選項
Vcore	CPU Vcore
CPU_VTT	CPU Termination
CPU_VAXG	CPU Graphic Core
VCC1_8_PCH	CPU PLL
VCC1_05_PCH	PCH core
3VDUAL	3VDUAL
DDR15V	DRAM voltage
DDRVTT	DRAM Terminatio
VREF_CA_A/VREF_CA_B	DRAM Address Ref
VREF_DQ_A/VREF_DQ_B	DRAM Data Ref

散熱模組料號:

Z77-D3H :
PCH :
12SP2-S05511-01R/02R/03R
MOSFET :
12SP2-S08924-01R/02R/03R

	3 pin FAN control	4 pin FAN control	FAN speed	Controller
CPU FAN	FANPWM1	FANPWM3	FANIO1	IT8720
	ICH_FAN_PWM2	ICH_FAN_PWM0	ICH_FAN_TACH0	PCH
SYS FAN	FANPWM2	N/A	FANIO2	IT8720
	ICH_FAN_PWM1	N/A	ICH_FAN_TACH1	PCH
PWR FAN	N/A	N/A	FANIO3	IT8720
			ICH_FAN_TACH2	PCH

Gigabyte Technology

Title: TABLE LIST

Size: C | Document Number: GA-Z87-D3H | Rev: 1.02

Date: Friday, March 15, 2013 | Sheet 34 of 34